ENGINEERING DETAILS INDEX:

A-1 CHIMNEY SEAL ---------- 2
A-2 SANITARY MANHOLE ---------- 3
A-3 COPPER WATER SERVICE CONNECTION ---------- 4
A-4 SANITARY SEWER CONNECTION TO EXISTING MANHOLE ---------- 5
A-5 PVC PIPE TRENCH ---------- 6
A-6 RCP & DIP TRENCH ---------- 7
A-7 THRUST BLOCK INSTALLATION ---------- 8
A-8 SERVICE BOX IN PAVED AREA ---------- 9

B-1 VALVE VAULT ---------- 10
B-2 PRESSURE CONNECTION ---------- 11
B-3 TYPE A & B STORM MANHOLE ---------- 12
B-4 N/ A
B-5 TYPE A & B CATCH BASIN ---------- 13
B-6 HYDRANT INSTALLATION ---------- 14
B-7 DROP MANHOLE ---------- 15
B-8 RESTRICTOR STRUCTURE ---------- 16

C-1 SUMP PUMP DISCHARGE CONNECTION ---------- 17
C-2 SANITARY & STORM SERVICE ---------- 18
C-3 STABILIZED CONSTRUCTION ENTRANCE ---------- 19
C-4 OVERFLOW (WEIR) STRUCTURE ---------- 20
C-5 N/ A
C-6 N/A
C-7 WATER MAIN RESTRAINT ---------- 21
C-8 MOUNTABLE CURB & GUTTER ---------- 22
C-9 TYPE B-6 BARRIER CURB ---------- 23

D-1 BRICK PAVING IN ROADWAY ---------- 24
D-2 N/A
D-3 PAVEMENT PATCH ---------- 25
D-4 MINIMUM PAVEMENT DETAILS ---------- 26
D-5 66.12 COMBINATION CURB & GUTTER ---------- 27
D-6 PIPE UNDERDRAIN (ROADWAY) ---------- 28
D-7 N/ A
D-8 BRICK PAVING ---------- 29
D-9 COMMERCIAL DRIVEWAY ---------- 30

E-1 TYPE A INLET ---------- 31
E-2 TYPE C CATCH BASIN ---------- 32
E-3 DRIVEWAY ---------- 33
E-4 WATER MAIN CROSSING ---------- 34
E-5 CONCRETE WALK JOINTS ---------- 35
E-6 FRAME AND LID ADJUSTMENT WITH CONCRETE COLLAR ---------- 36
E-7 PLANTING GUIDELINES ---------- 37

F-1 CONCENTRIC CUL-DE-SAC ---------- 38
F-2 ECCENTRIC CUL-DE-SAC ---------- 39
F-3 TEMPORARY TOPSOIL STOCKPILE ---------- 40
F-4 66.18 CURB & GUTTER FOR R-3250 CURB INLET ---------- 41
F-5 N/A
F-6 LOT GRADING GUIDELINES ---------- 42

G-1 66.18 COMBINATION CURB & GUTTER ---------- 43
G-2 SIDEWALK AT CURB & GUTTER ---------- 44
G-3 PIPE COUPLING ---------- 45
G-4 CASING PIPE ---------- 46
G-5 64.12 COMBINATION CURB & GUTTER ---------- 47
G-6 EROSION CONTROL ---------- 48

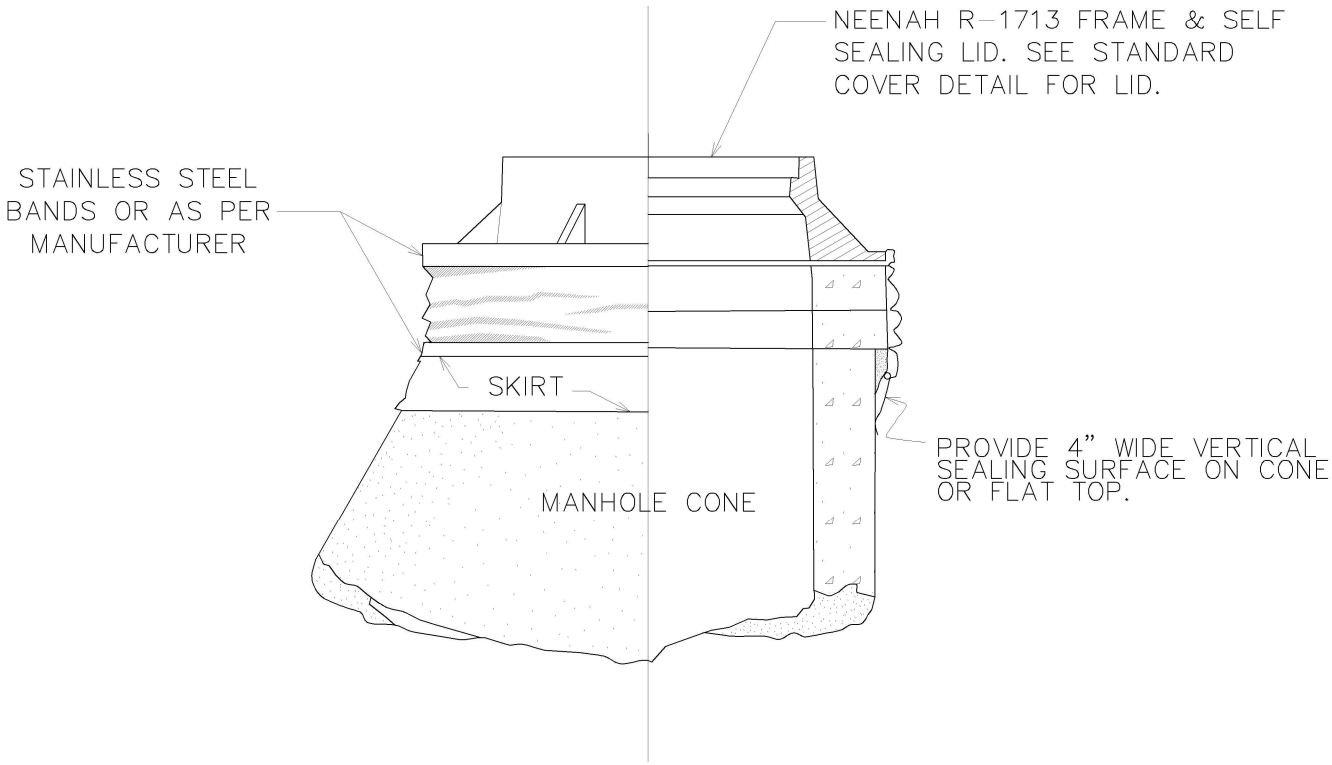

EXTERNAL CHIMNEY SEALS
TO SPAN CHIMNEY HEIGHTS OF:

0 – 3"	NARROW (6") SEAL ONLY
3 TO 6"	STANDARD (9") SEAL ONLY
6" TO 12"	STD. SEAL + EXTENSION
OVER 12"	SEAL + MULTI. EXTENSIONS

NOTE:

1. CHIMNEY SEALS SHALL BE INSTALLED ON ALL SANITARY SEWER SYSTEM MANHOLES THAT DO NOT RECEIVE A CONCRETE COLLAR.

2. INFISHIELD, CRETEX, OR APPROVED EQUAL EXTERNAL SEALS ARE REQUIRED. OTHER PRODUCTS OR OTHER DESIGN SOLUTIONS SHALL REQUIRE THE APPROVAL OF THE CITY ENGINEER.

3. CHIMNEY SEALS SHALL BE INSTALLED IN ACCORDANCE WITH THE MANUFACTURER'S INSTRUCTIONS.

NOT TO SCALE

CHIMNEY SEAL DETAIL

DATE: 4-6-2020

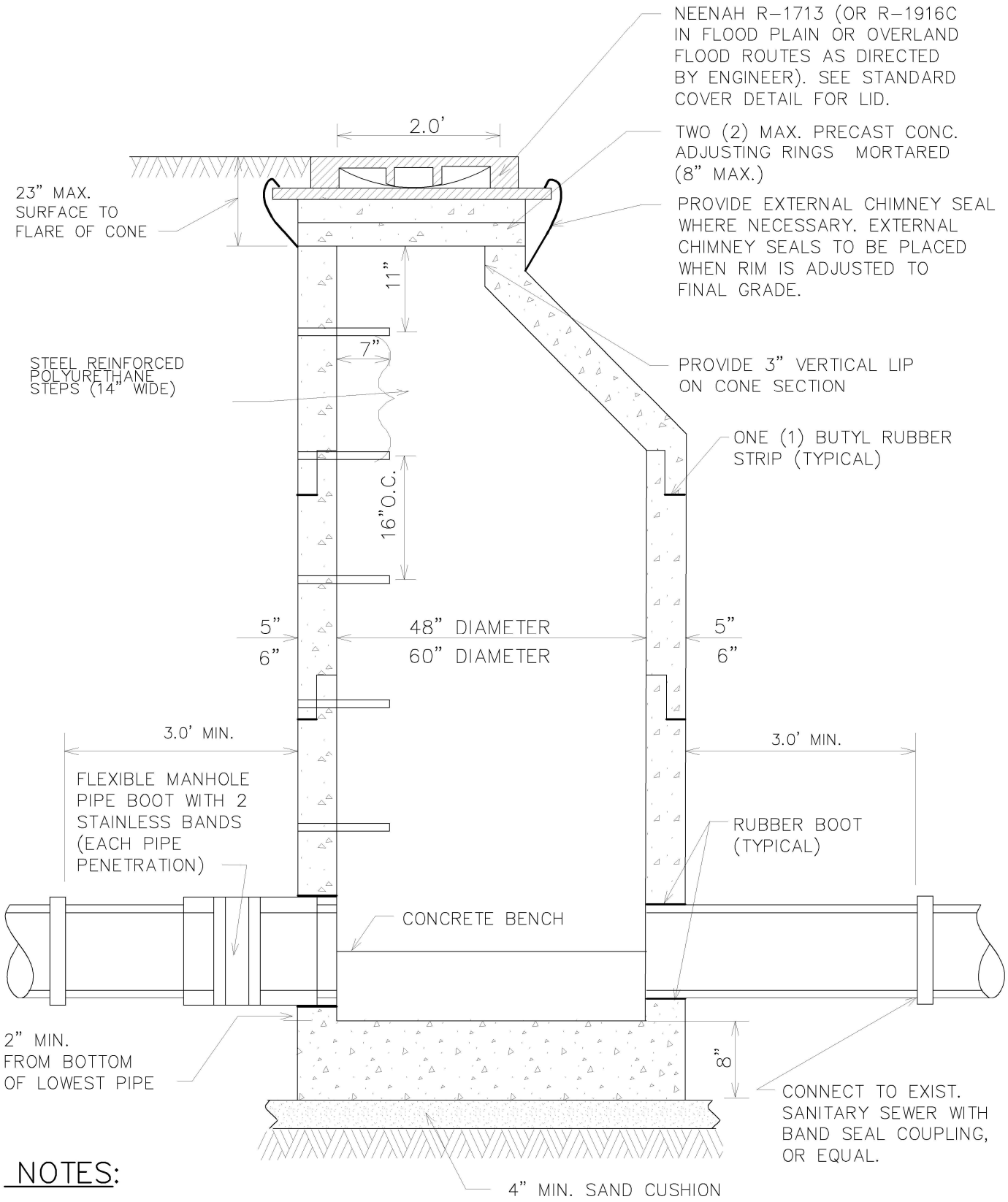

NOTES:

1. MANHOLES MUST CONFORM TO ASTM C-478.
2. MANHOLE SECTIONS TO BE TONGUE AND GROOVED.
3. BENCHES MUST BE PROVIDED IN ALL SANITARY SEWER MANHOLES
4. USE EXTERNAL LIFTING "HOLES" ONLY, BUT NOT FULL PENETRATION.
5. NON-PRECAST OPENINGS SHALL BE CORED AND RUBBER BOOTED.
6. PIPE PENETRATIONS TO BE RUBBER BOOTED AND INTERIOR MORTARED.
7. USE ECCENTRIC CONE ONLY.
8. PRIOR TO THE PLACEMENT OF FINAL LAYER OF ROADWAY, FRAMES AND ADJUSTING RINGS LOCATED WITHIN PAVED AREAS SHALL BE SET IN AN IDOT APPROVED CONCRETE "SI" MIXTURE.

NOT TO SCALE

DATE: 4-6-2020

SANITARY MANHOLE DETAIL

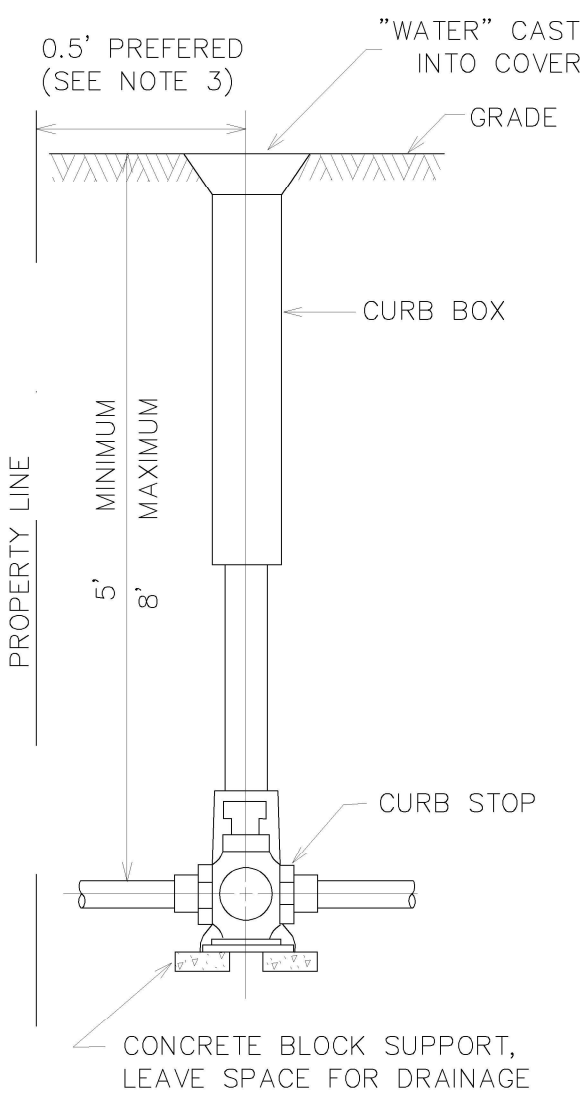

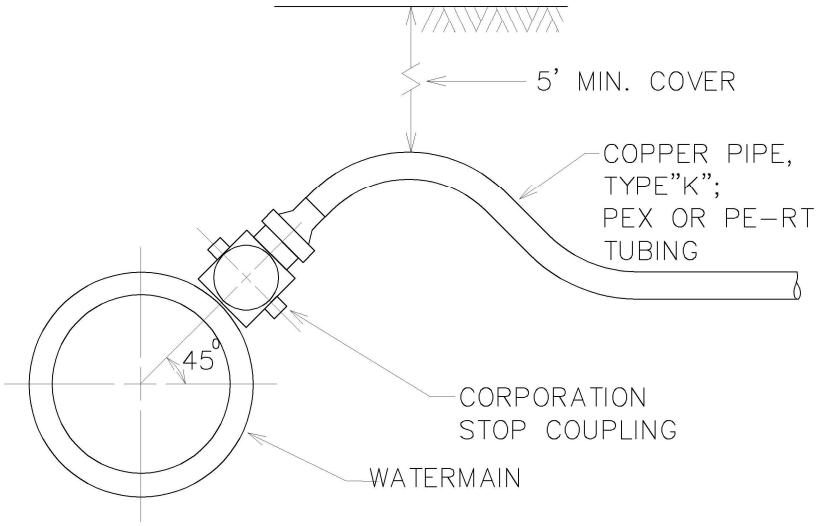

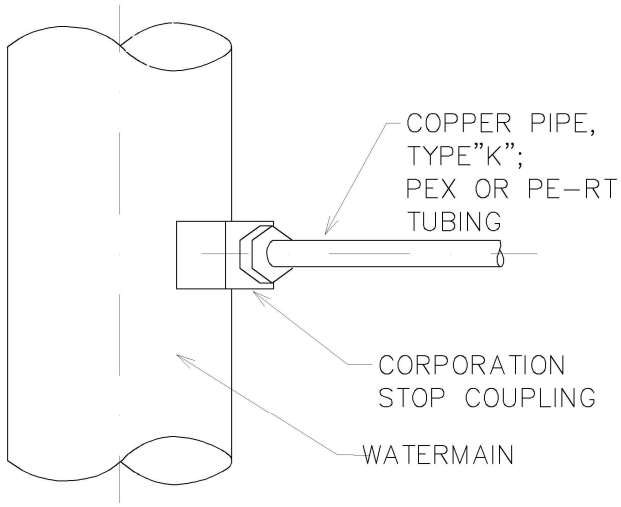

A. CURB BOX:

1. MINNEAPOLIS PATTERN WITH 1-1/4" I.D. UPPER SECTION AND 2" TAPPED BASE."

B. CURB STOP:

MUELLER B-25155-N (1",1", 2")
A.Y. McDONALD 76104-Q 1",1",2"

C. CORPORATION STOP:

MUELLER B-25008-N (1",1-1/2", 2")
A.Y. McDONALD 74701-BQ 1", 1-1/2", 2"

NOTES:

1. PIPE SIZE CAN VARY, BUT 1" MINIMUM. OTHER APPURTENANCES SHALL REFLECT SAME.
2. COPPER PIPE SHALL BE ONE PIECE BETWEEN TAP AND CURB BOX.
3. PLACE BETWEEN SIDEWALK AND PROPERTY LINE. KEEP BOXES OUT OF SIDEWALKS AND DRIVEWAY.
4. MINIMUM OF 3' BETWEEN TAPS AND 3' TO NEAREST JOINT.
5. 1" SERVICE MAY BE DIRECTLY TAPPED INTO 6" OR LARGER MAIN. LARGER SERVICES REQUIRE A FULL CIRCLE SADDLE MADE OF GRADE 304 STAINLESS STEEL WITH NYLON WASHERS AND NITRILE GASKETS

NOT TO SCALE

COPPER WATER SERVICE CONNECTION DETAILS

DATE: 4-10-2020

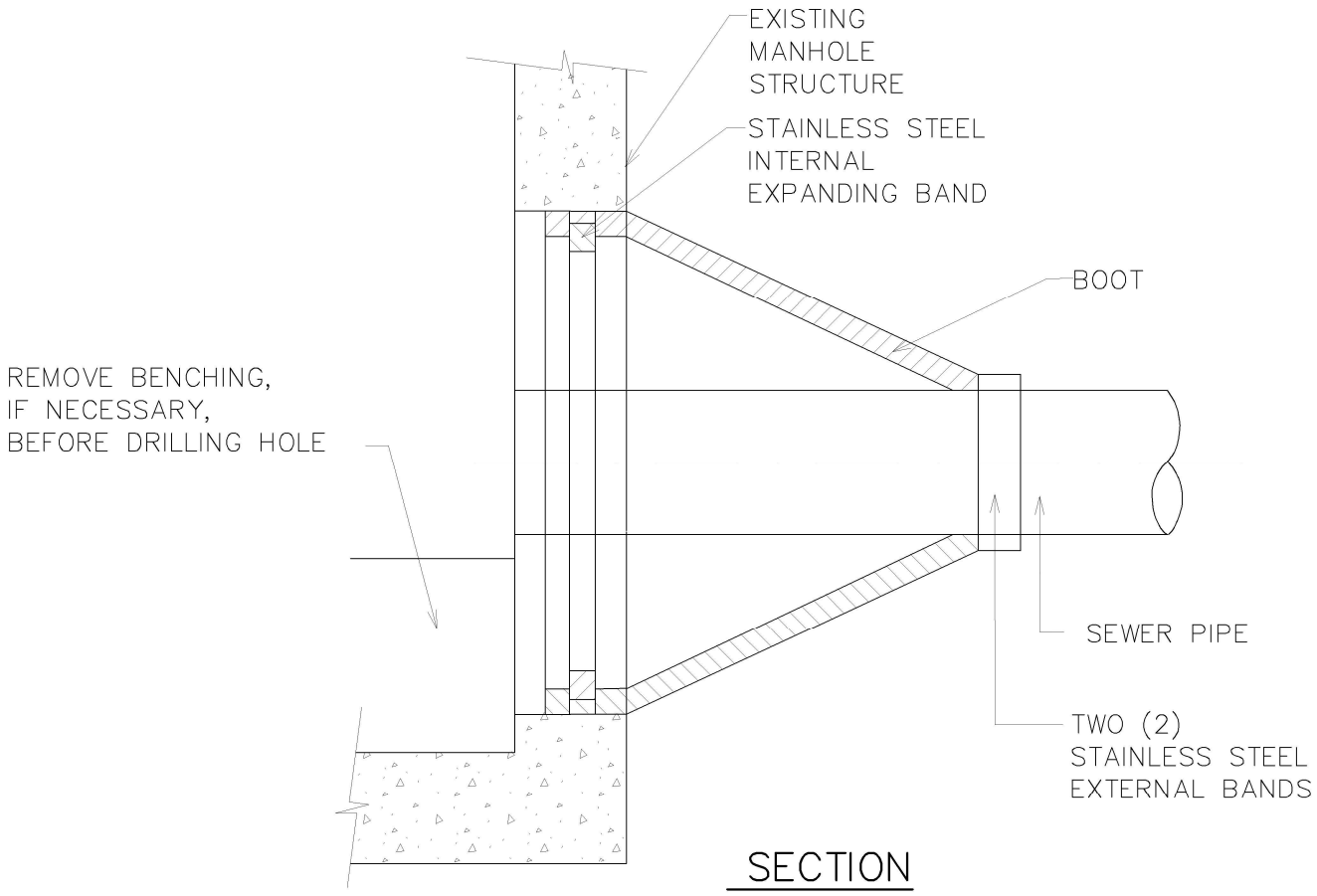

SECTION

NOTES:

1. CORE-DRILL CIRCULAR OPENING IN MANHOLE WALL OF DIAMETER TO FIT THE REQUIRED BOOT SIZE.
2. KOR-N SEAL FLEXIBLE RUBBER BOOT (MANUFACTURED BY NATIONAL POLLUTION CONTROL SYSTEMS, INC. OR AS APPROVED BY THE CITY ENGINEER) SHALL BE USED FOR WATERTIGHT CONNECTION.
3. CUT, SHAPE AND SLOPE NEW INVERT CHANNEL IN THE EXISTING CONCRETE BENCH FOR SMOOTH FLOW FROM NEW SANITARY SEWER CONNECTION.
4. CLEAN EXISTING MANHOLE OF ANY DIRT, CONCRETE OR DEBRIS WHICH MAY ACCUMULATE DURING THE CONSTRUCTION PROCESS.

NOT TO SCALE

SANITARY SEWER CONNECTION TO EXISTING MANHOLE

DATE: 4-6-2020

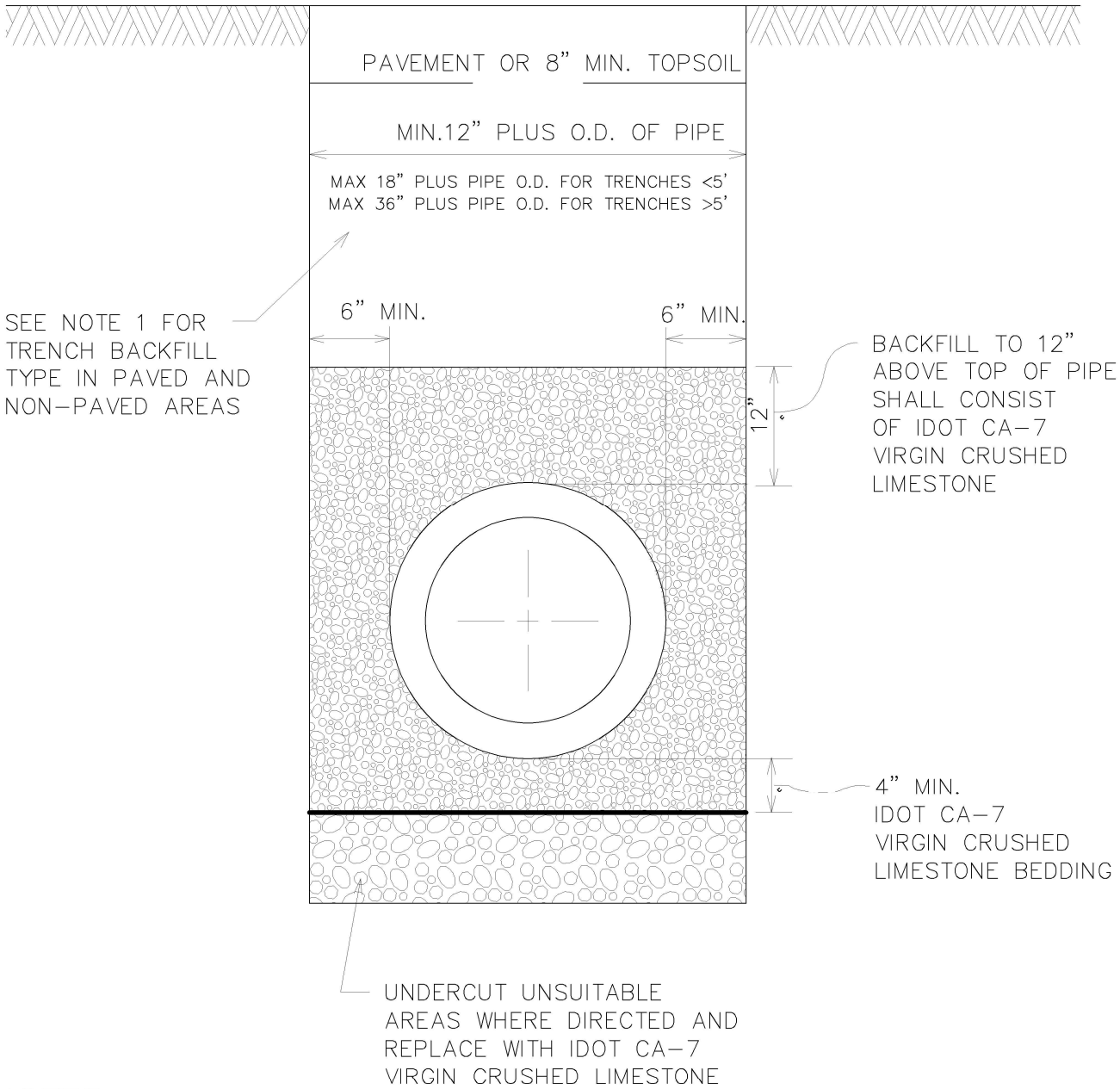

NOTES:

1. TRENCH BACKFILL MATERIAL SHALL CONSIST OF CA-7 (VIRGIN CRUSHED LIMESTONE) UNDER PAVED AREAS OR WITHIN ZONE OF INFLUENCE, OR EARTH BACKFILL IN NON-PAVED AREAS.

2. ALL MATERIALS SHALL BE PROPERLY COMPACTED PER SPECIFICATIONS (INUNDATION OR WATER JETTING NOT ALLOWED)

3. ALL TRENCH EXCAVATIONS SHALL MEET OSHA REQUIREMENTS.

4. ALL STORM SEWER SMALLER THAN 15" DIA. THAT WILL BE PUBLICLY OWNED & MAINTAINED SHALL BE RIGID PVC PIPE, MINIMUM SDR 26 WITH PUSH-ON GASKET JOINTS.

NOT TO SCALE

DATE: 4-6-2020

PVC PIPE TRENCH DETAIL

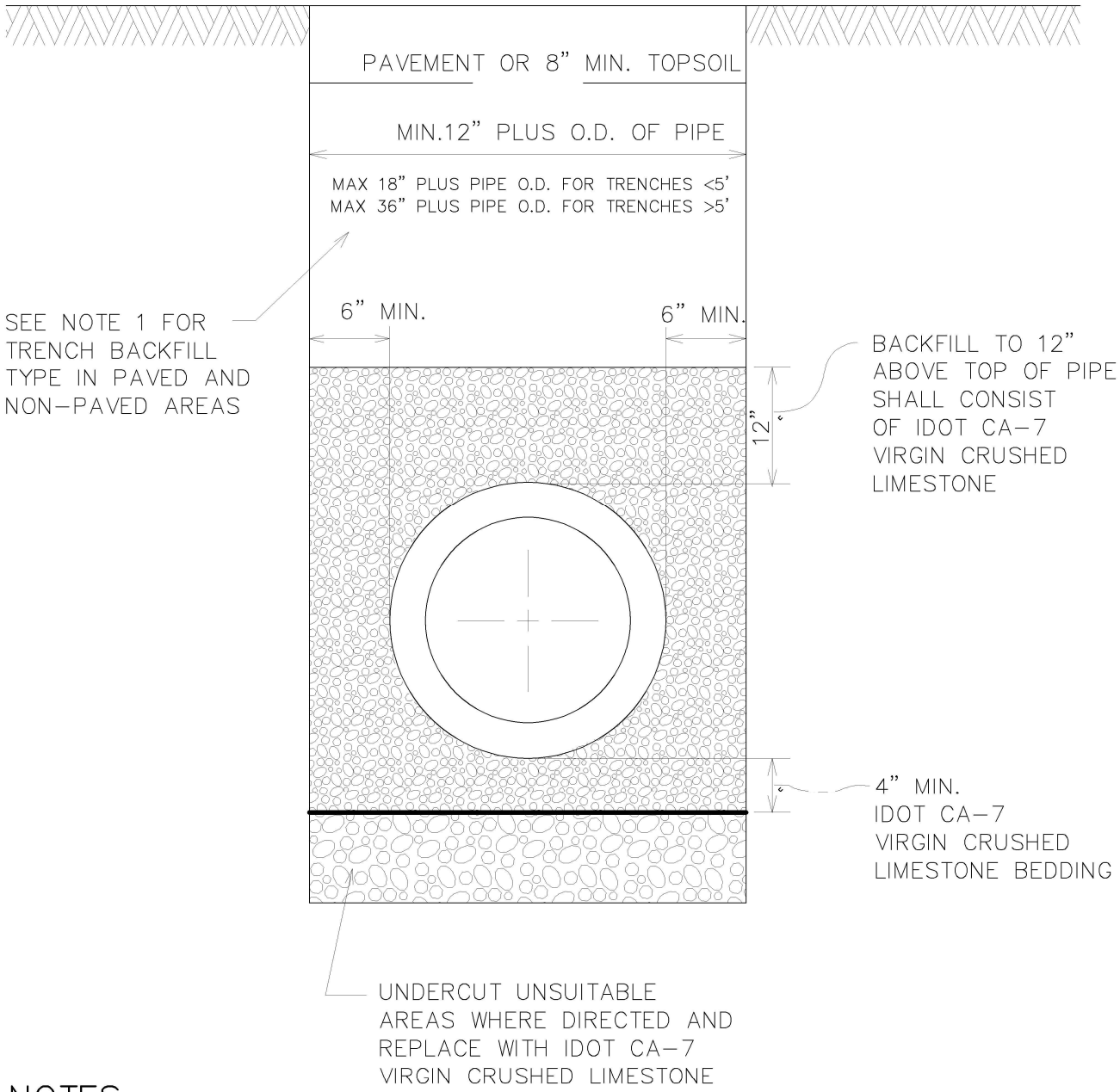

NOTES:

1. TRENCH BACKFILL MATERIAL SHALL CONSIST OF CA-7 (VIRGIN CRUSHED LIMESTONE) UNDER PAVED AREAS OR WITHIN ZONE OF INFLUENCE, OR EARTH BACKFILL IN NON-PAVED AREAS.

2. ALL MATERIALS SHALL BE PROPERLY COMPACTED PER SPECIFICATIONS (INUNDATION OR WATER JETTING NOT ALLOWED)

3. ALL TRENCH EXCAVATIONS SHALL MEET OSHA REQUIREMENTS.

4. ALL STORM SEWER SMALLER THAN 15" DIA. THAT WILL BE PUBLICLY OWNED & MAINTAINED SHALL BE RIGID PVC PIPE, MINIMUM SDR 26 WITH PUSH-ON GASKET JOINTS.

NOT TO SCALE

DATE: 4-6-2020

RCP & DIP TRENCH DETAIL

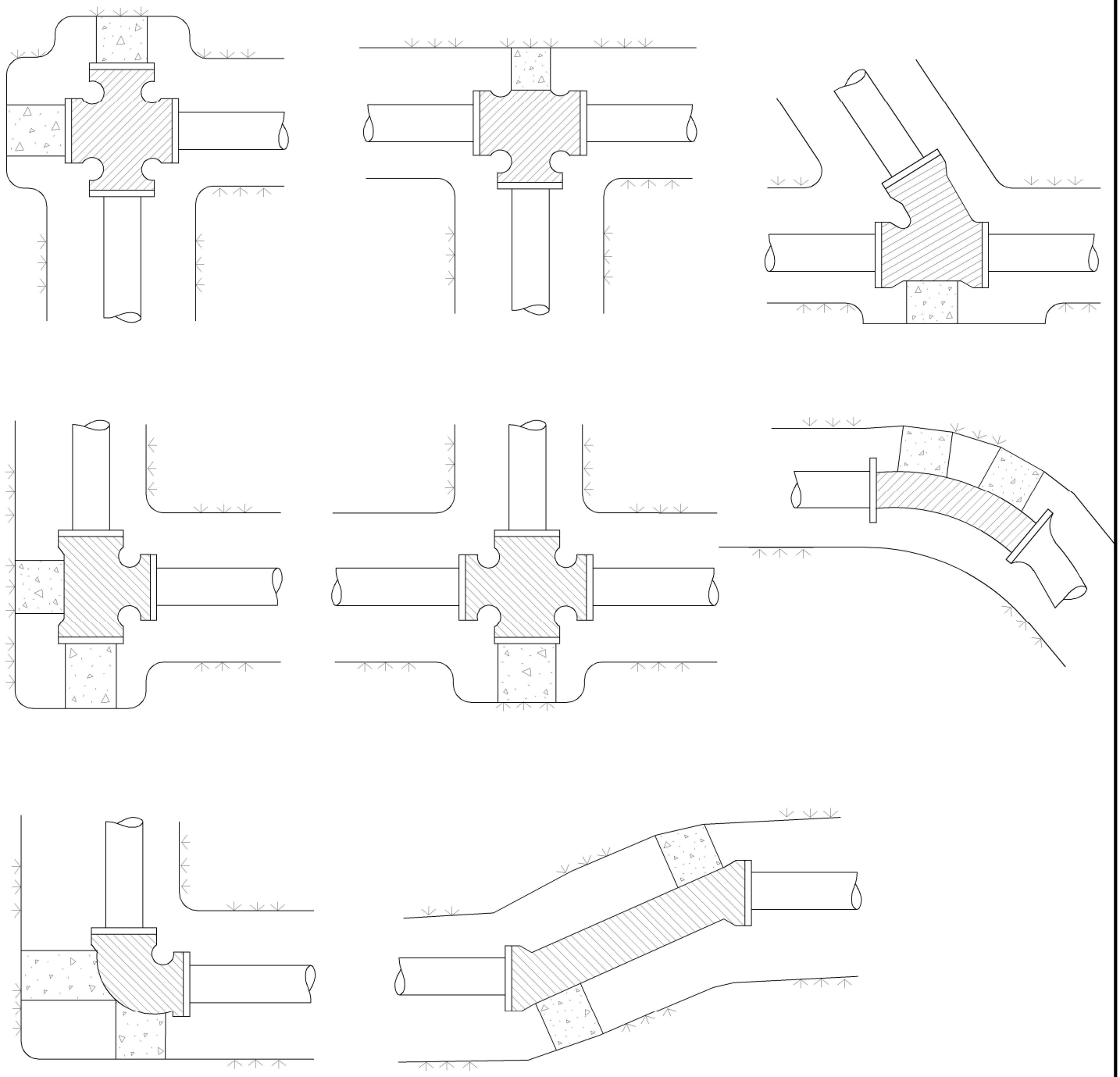

NOTE:

1. ALL BENDS OF 10° AND LARGER SHALL BE BLOCKED WITH AT LEAST 10" THICK PREFORMED CONCRETE BLOCK(S) AGAINST UNDISTURBED VERTICAL EARTH FACE. NO POURED IN PLACE CONCRETE THRUST BLOCKING ALLOWED

2. ALL CONCRETE TO BE MIN. 3,000 PSI.

3. IN ADDITION TO THE ABOVE THRUST BLOCKING: ALL MECHANICAL JOINTS, BENDS OVER 10° AND FIRE HYDRANTS SHALL HAVE A "MEGALUG" RESTRAINT, OR AS APPROVED BY THE CITY ENGINEER. BOLTS SHALL BE "COR-TEN".

NOT TO SCALE

DATE: 4-6-2020

THRUST BLOCK INSTALLATION DETAILS

SERVICE BOX IN PAVED AREA

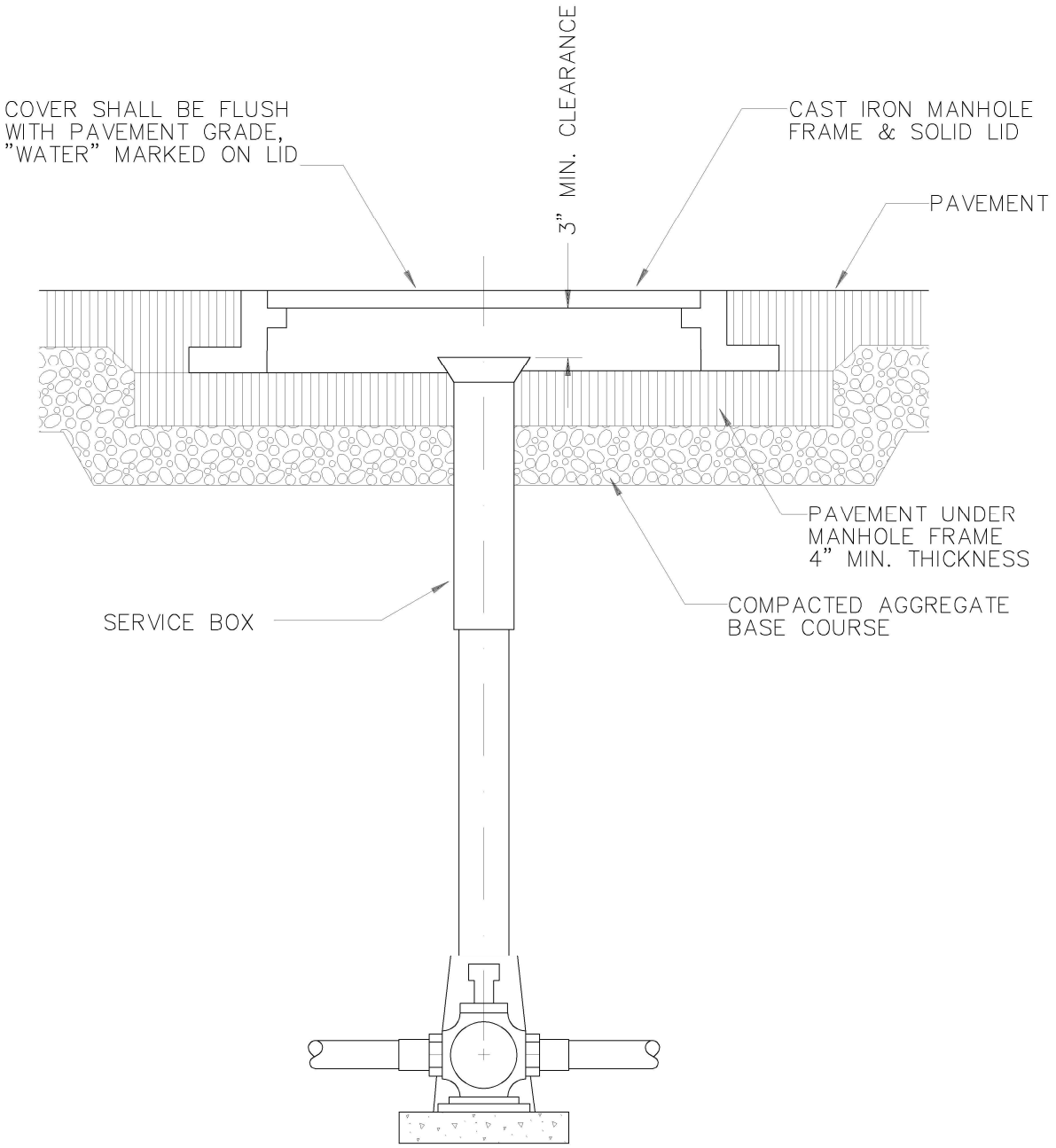

NOT TO SCALE

DATE: 4-6-2020

SERVICE BOX IN PAVED AREA

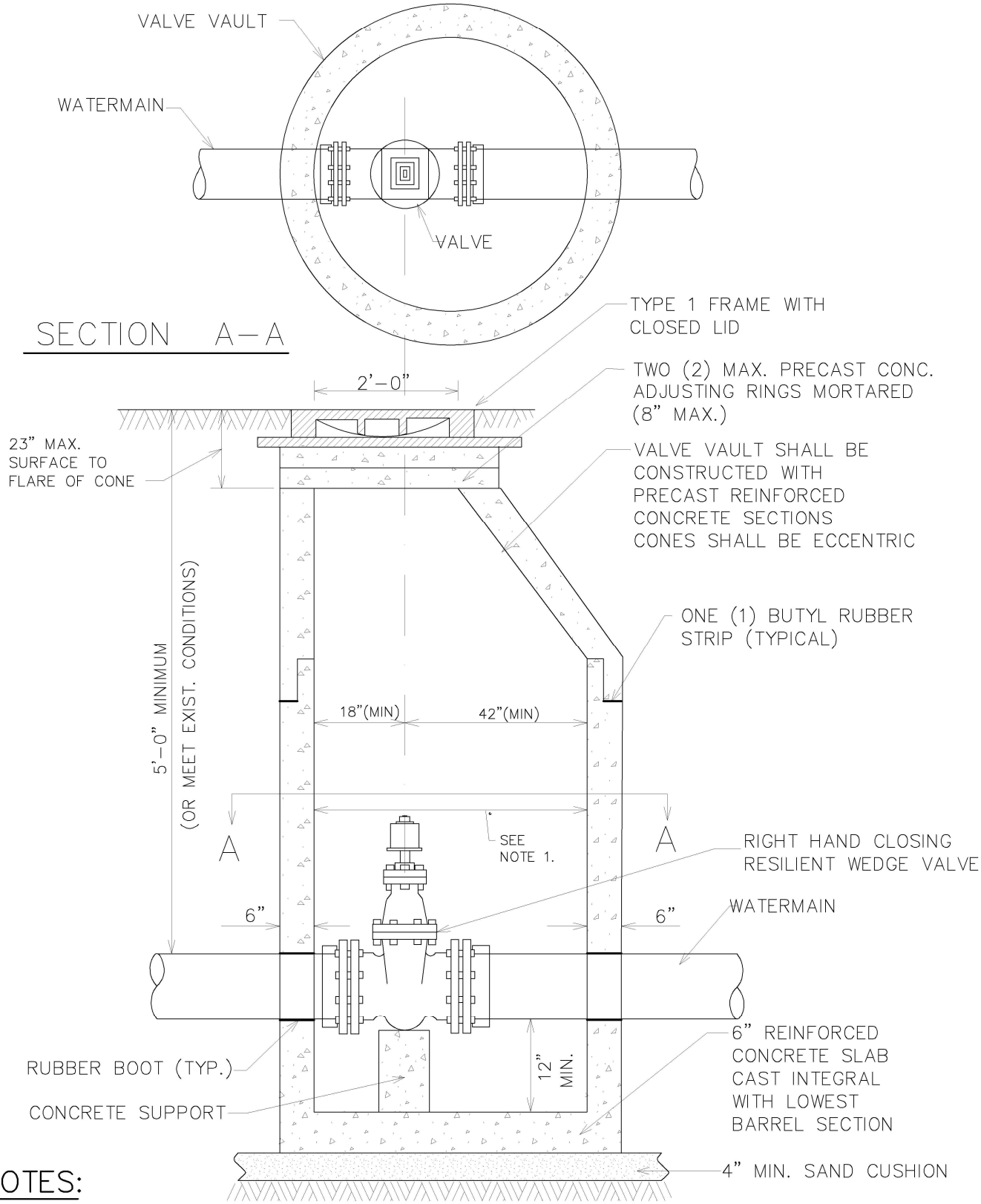

NOTES:

1. 48" MIN. INSIDE DIA. FOR VALVES LESS THAN 8" DIA.
   60" MIN. INSIDE DIA. FOR ALL OTHER VALVE VAULTS.
2. VALVE VAULT MUST CONFORM TO ASTM C–478.
3. VALVES MUST CONFORM TO AWWA C–515
4. VAULT SECTIONS TO BE TONGUE AND GROOVED.
5. NON–PRECAST PIPE OPENINGS TO BE CORED AND RUBBER BOOTS INSTALLED.
6. BACKFILL MATERIAL SHALL BE IDOT CA–7 VIRGIN CRUSHED LIMESTONE.
7. a) MECHANICAL JOINT BOLTS, NUTS & WASHERS SHALL BE COMPOSED OF CORE–TEN.
   b) ALL OTHER HEXAGONAL BOLTS, NUTS & WASHERS SHALL BE COMPOSED OF 304 GRADE STAINLESS STEEL.
8. PRIOR TO THE PLACEMENT OF FINAL LAYER OF ROADWAY, FRAMES AND ADJUSTING RINGS LOCATED WITHIN PAVED AREAS SHALL BE SET IN AN IDOT APPROVED CONCRETE "SI" MIXTURE.

DATE: 4–6–2020

NOT TO SCALE

VALVE VAULT DETAIL

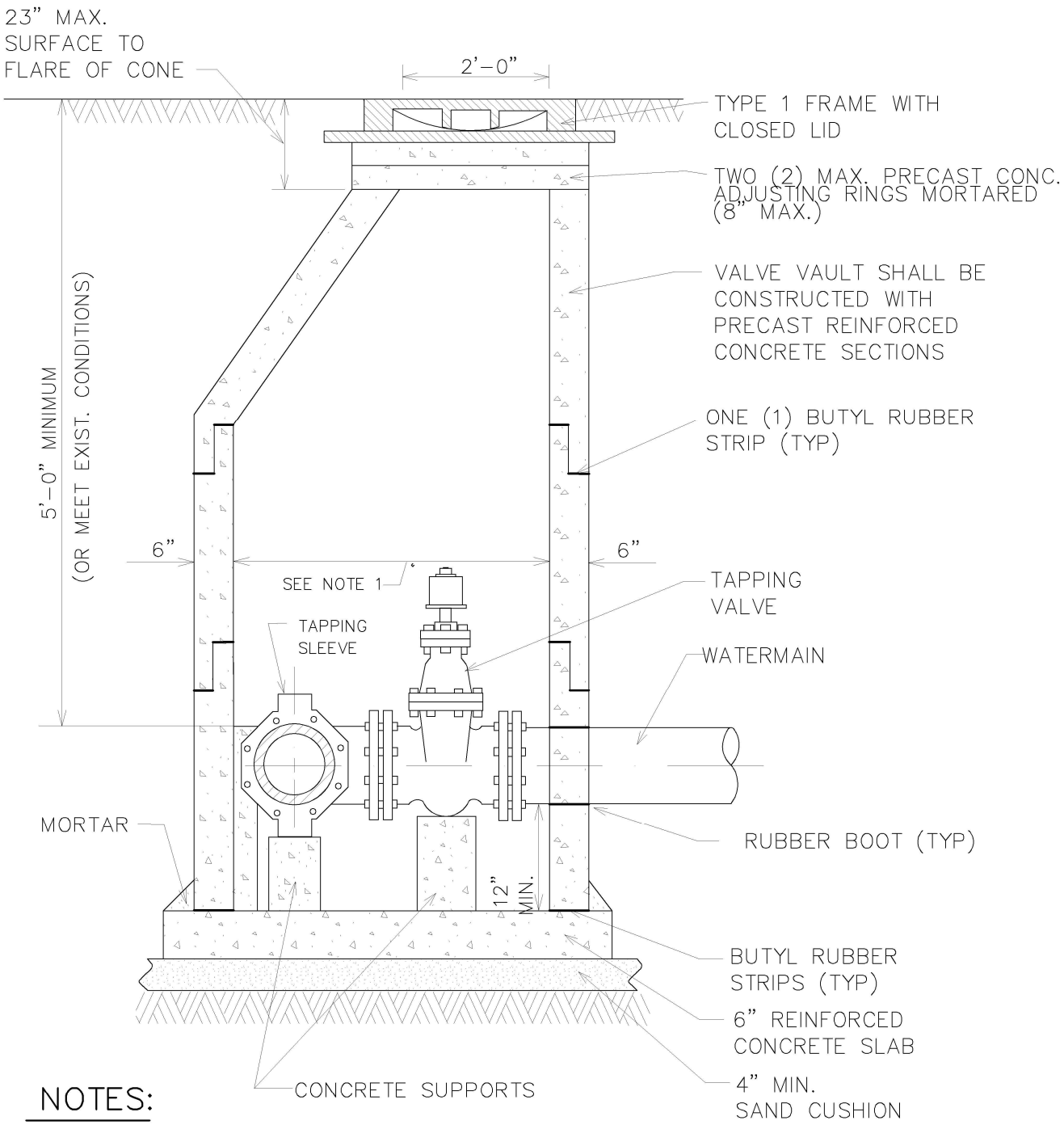

NOTES:

1. 60" (MIN) INSIDE DIA. FOR ALL PRESSURE CONNECTION VAULTS.
2. ALL NON-PRECAST PIPE OPENINGS TO BE CORED AND RUBBER BOOTED.
3. BACKFILL MATERIAL SHALL BE IDOT CA-7 VIRGIN CRUSHED LIMESTONE.
4. a) MECHANICAL JOINT BOLTS & NUTS SHALL BE COMPOSED OF CORE-TEN.
   b) ALL OTHER HEXAGONAL BOLTS, NUTS & WASHERS SHALL BE COMPOSED OF 304 GRADE STAINLESS STEEL.
5. USE ECCENTRIC CONE ONLY.
6. VALVE VAULT MUST CONFORM TO ASTM C-478.
7. ALL SECTIONS TO BE TONGUE AND GROOVED.
8. BLOCKING SHALL NOT INTERFER WITH BOLT MAINTENANCE OR REPLACEMENT.
9. PRIOR TO THE PLACEMENT OF FINAL LAYER OF ROADWAY, FRAMES AND ADJUSTING RINGS LOCATED WITHIN PAVED AREAS SHALL BE SET IN AN IDOT APPROVED CONCRETE "SI" MIXTURE.

NOT TO SCALE

DATE: 4-6-2020

PRESSURE CONNECTION DETAIL

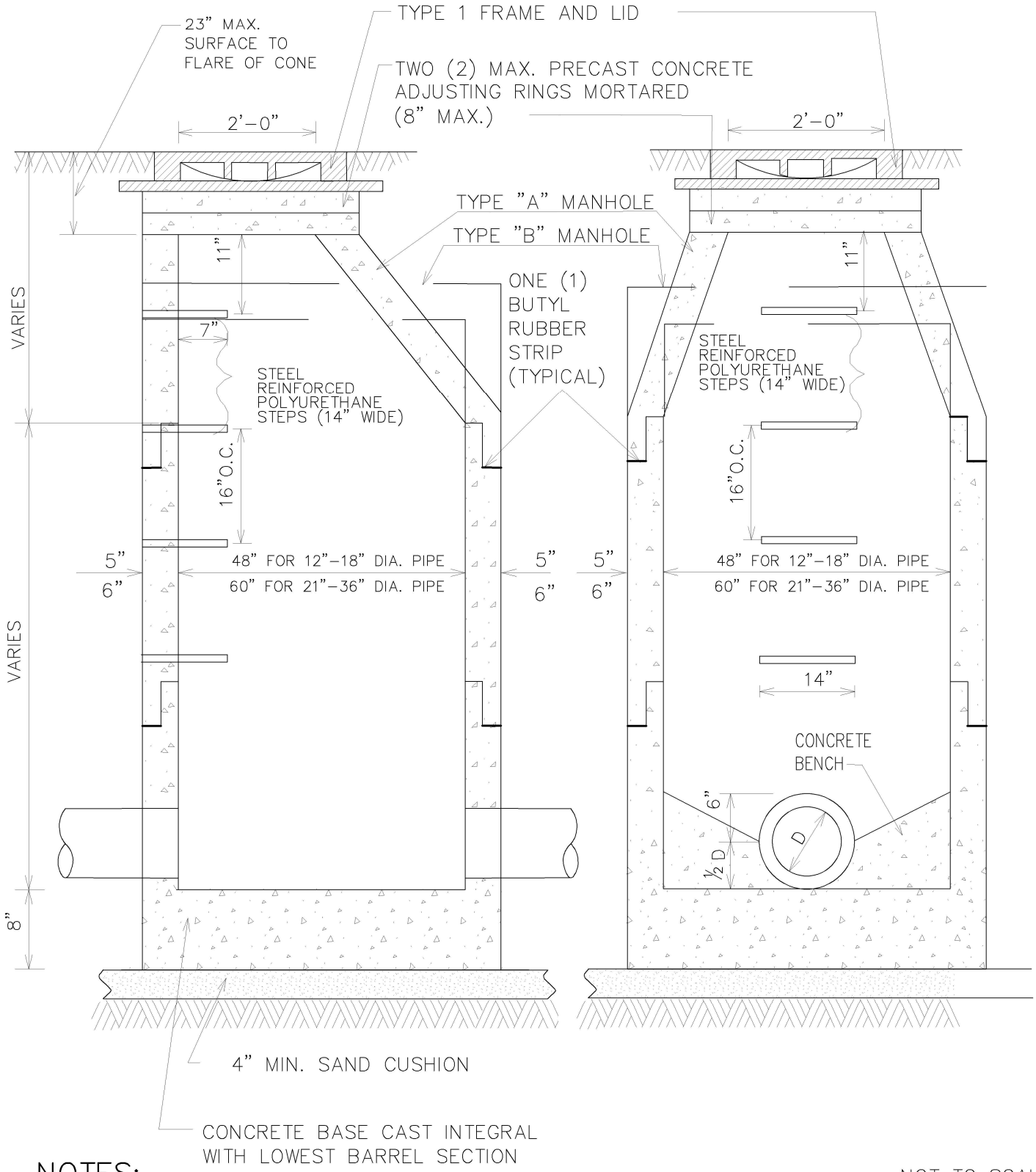

NOTES:

1. MANHOLES MUST CONFORM TO ASTM C-478.
2. MANHOLE SECTIONS TO BE TONGUE AND GROOVED.
3. BENCHES MUST BE PROVIDED IN ALL STORM SEWER MANHOLES.
4. NON-PRECAST OPENINGS SHALL BE CORED AND RUBBER BOOTED.
5. MORTAR ALL PIPE PENETRATIONS INSIDE AND OUTSIDE OF STRUCTURE.
6. IN "SUBMERGED" CONDITIONS, ALL PIPE PENETRATIONS TO BE CORED, RUBBER BOOTED AND INTERIOR MORTARED.
7. PRIOR TO THE PLACEMENT OF FINAL LAYER OF ROADWAY, FRAMES AND ADJUSTING RINGS LOCATED WITHIN PAVED AREAS SHALL BE SET IN AN IDOT APPROVED CONCRETE "SI" MIXTURE.

NOT TO SCALE

DATE: 4-6-2020

TYPE A & B STORM MANHOLE DETAIL

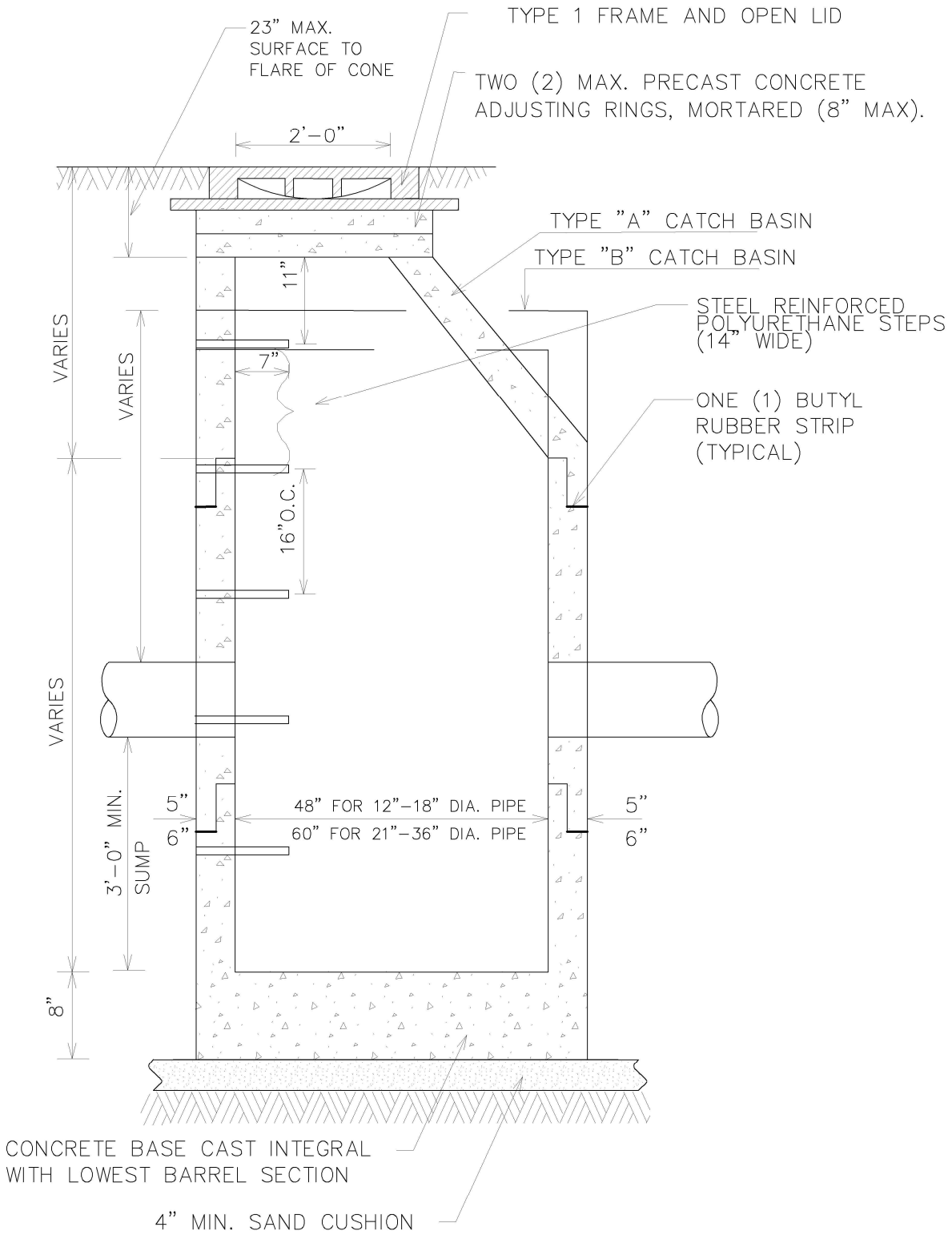

NOTES:

1. MANHOLES MUST CONFORM TO ASTM C-478.
2. MANHOLE SECTIONS TO BE TONGUE AND GROOVED.
3. NON-PRECAST OPENINGS SHALL BE CORED AND RUBBER BOOTED.
4. MORTAR ALL PENETRATIONS INSIDE AND OUTSIDE OF STRUCTURE.
5. IN "SUBMERGED" CONDITIONS, ALL PIPE PENETRATIONS TO BE CORED, RUBBER BOOTED AND INTERIOR MORTARED.
6. PRIOR TO THE PLACEMENT OF FINAL LAYER OF ROADWAY, FRAMES AND ADJUSTING RINGS LOCATED WITHIN PAVED AREAS SHALL BE SET IN AN IDOT APPROVED CONCRETE "SI" MIXTURE.

NOT TO SCALE

TYPE A & B CATCH BASIN DETAIL

DATE: 4-6-2020

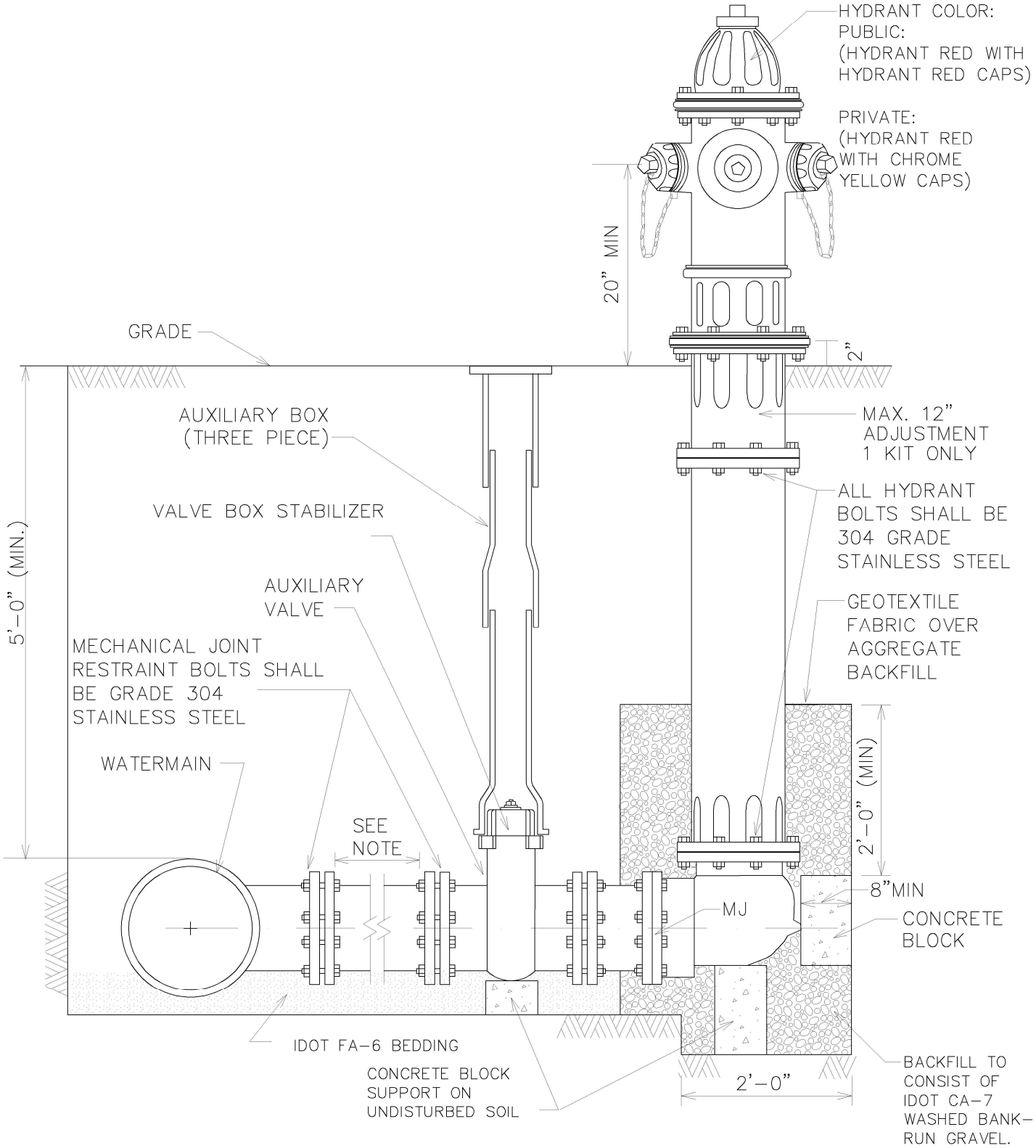

HYDRANT SPECIFICATIONS:

MUELLER CENTURION, WATEROUS PACER MODEL, CLOW MEDALLION THAT INCLUDES
(2) 2 ½" NST NOZZLES
(1) 5" STORZ FITTING WITH LOCKS
MECHANICAL JOINT SHOE WITH 6" RESILIENT WEDGE AUXILIARY VALVE.
5-1/4" VALVE OPENING
5' MIN. COVER OVER HYDRANT LATERAL
VALVE BOX SHALL HAVE AN INTERNAL VALVE BOX STABILIZER INSTALLED

NOT TO SCALE

HYDRANT INSTALLATION

DATE: 4-14-2020

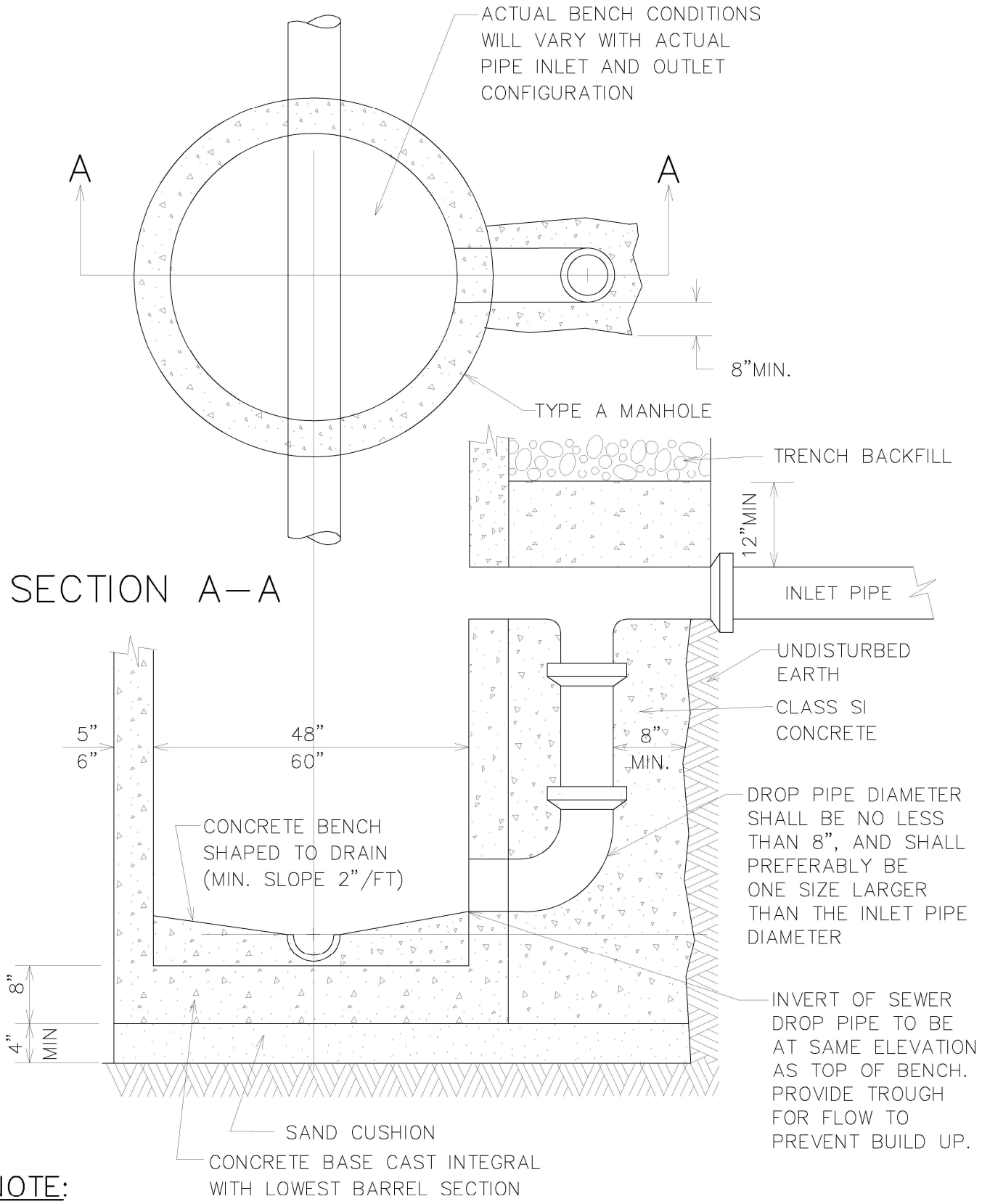

NOTE:

1. DROP MANHOLE WILL BE REQUIRED WHERE DIFFERENCE BETWEEN INVERT ELEVATION OF INLET AND DOWNSTREAM PIPE IS GREATER THAN 12".

2. NON–PRECAST OPENINGS SHALL BE CORED AND RUBBER BOOTED.

NOT TO SCALE

DATE: 4–6–2020

DROP MANHOLE DETAIL

RESTRICTOR STRUCTURE

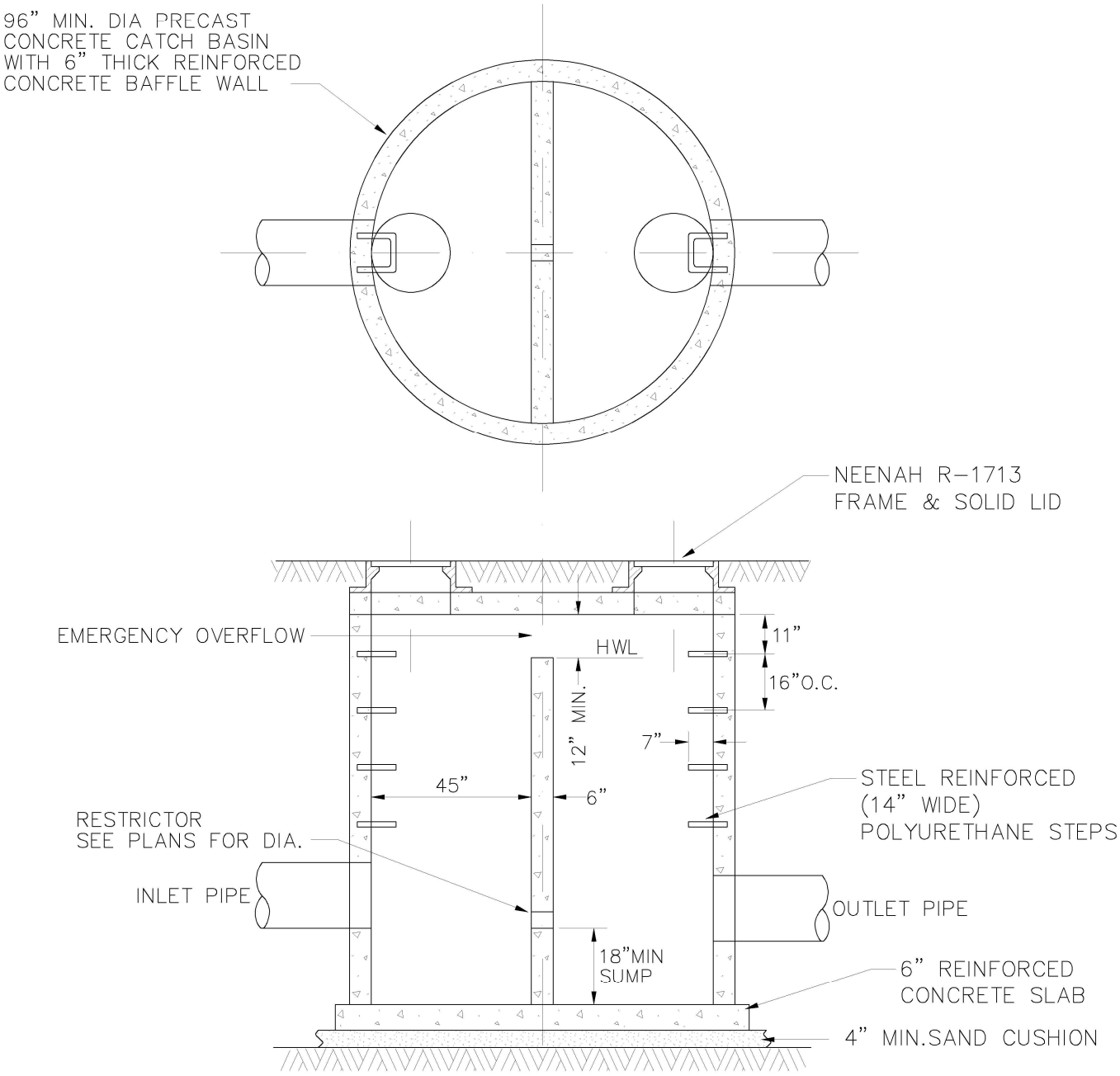

NOTES:

1. RESTRICTOR SIZE TO BE APPROVED BY THE CITY ENGINEER.
2. MANHOLES MUST CONFORM TO ASTM C-478.
3. MANHOLE SECTIONS TO BE TONGUE AND GROOVED.
4. NON-PRECAST OPENINGS SHALL BE CORED AND RUBBER BOOTED.
5. MORTAR ALL PIPE PENETRATIONS INSIDE AND OUTSIDE OF STRUCTURE.
6. IN "SUBMERGED" CONDITIONS, ALL PIPE PENETRATIONS TO BE CORED, RUBBER BOOTED AND INTERIOR MORTARED.

NOT TO SCALE

RESTRICTOR STRUCTURE

DATE: 4-6-2020

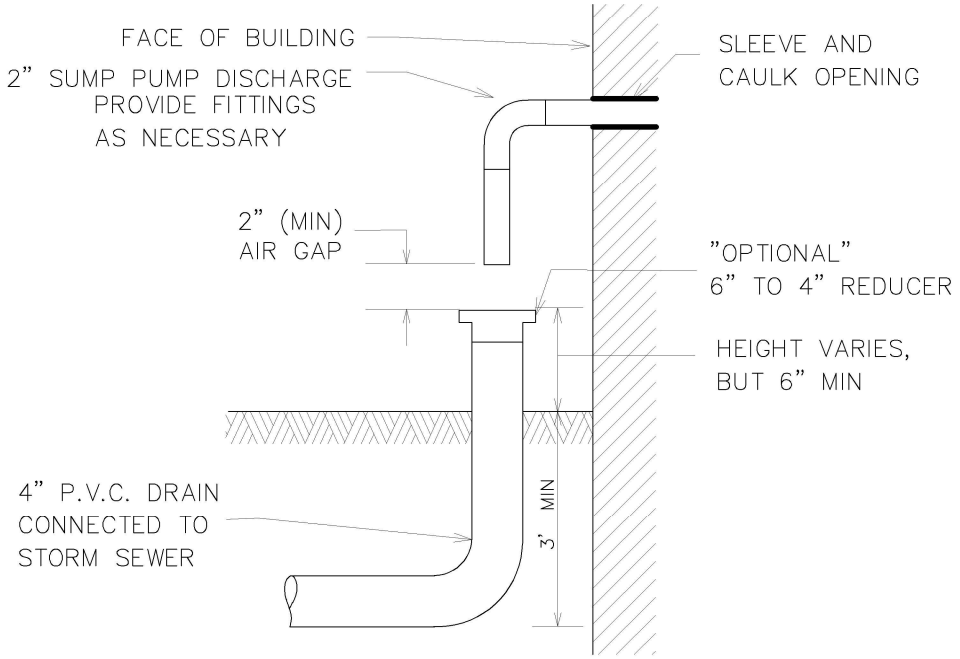

SUBSURFACE DRAIN TILE

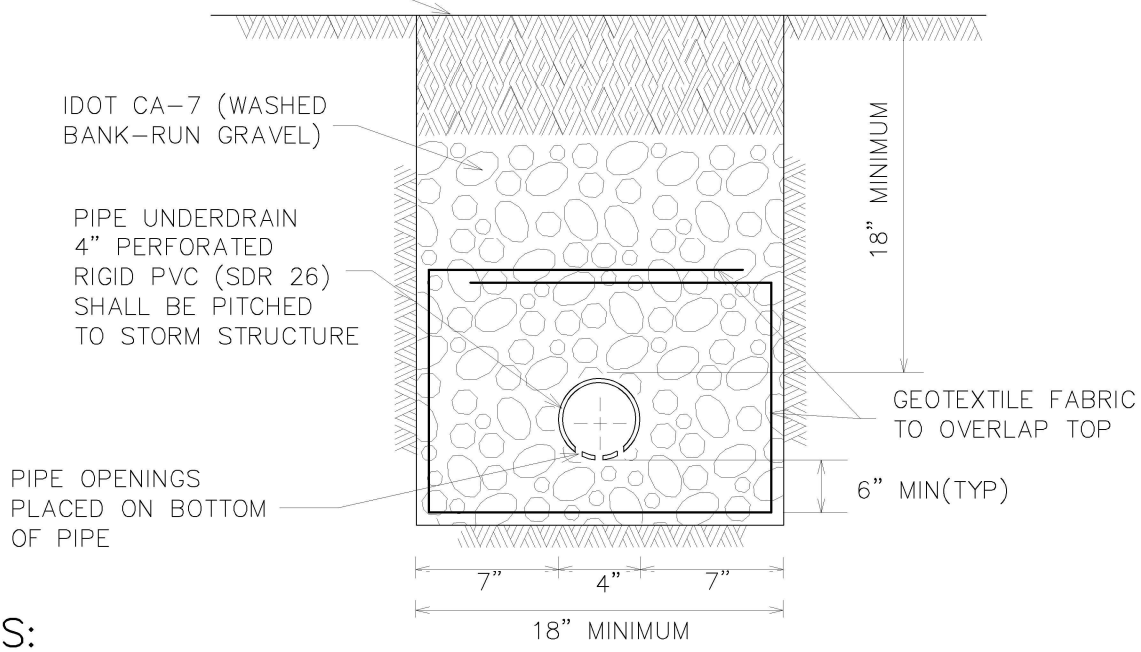

NOTES:

SUMP PUMPS SHALL BE DESIGNED WITH A MINIMUM 2" AIR GAP. A RIGID FOUR-INCH (4") DIAMETER PVC PIPE CAN BE USED TO CONNECT THE INDIVIDUAL SUMP PUMP SERVICE TO THE STORM SEWER. IN NO EVENT SHALL THE SUMP PUMP DISCHARGE INTO THE SANITARY SEWER SYSTEM.

A PLUMBING PERMIT AND ROW PERMIT IS REQUIRED PRIOR TO ANY CONNECTION. INCLUDE A PLAT OF SURVEY WITH THE PERMIT APPLICATION, SHOWING THE POINT OF DISCHARGE AND CONNECTION TO THE STORM SEWER. THE SITE PLAN SHALL ALSO INCLUDE PIPE SPECIFICATIONS AND INVERT ELEVATIONS. CALL THE PUBLIC WORKS OFFICE 24 HOURS IN ADVANCE TO SCHEDULE AN INSPECTION.

NOT TO SCALE
DATE: 4-10-2020

SUMP PUMP DISCHARGE CONNECTION DETAIL

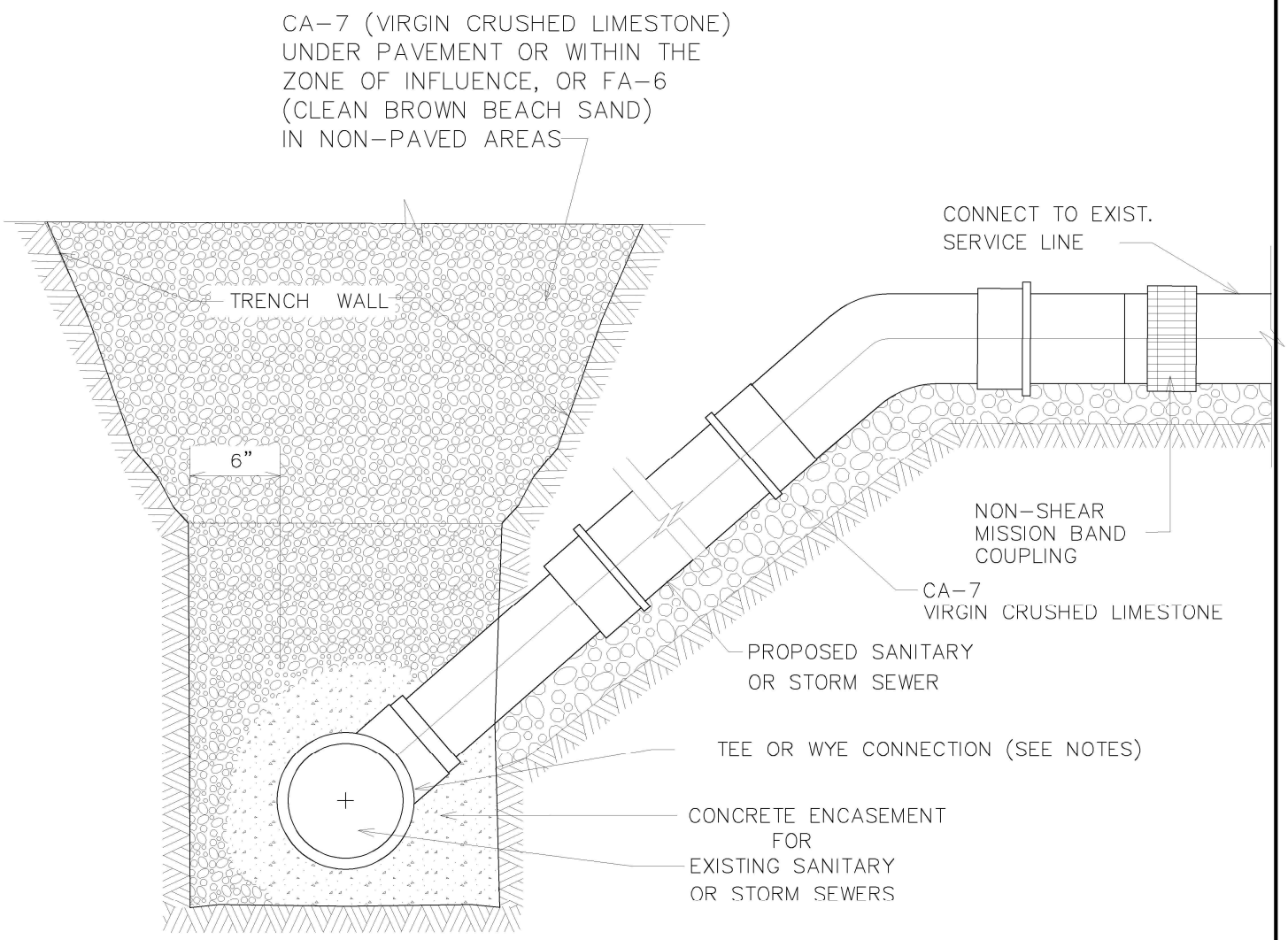

NOTES:

1. FOR PROPOSED STORM SEWER SERVICE $\leq$ 6" ON RCP PIPE $\geq$ 15", CORE THE PIPE AND USE A BOOT CONNECTION.

2. FOR PROPOSED STORM SEWER SERVICE $\geq$ 8", A MANHOLE SHALL BE INSTALLED.

3. FOR CONNECTING SANITARY OR STORM SEWER SERVICE TO AN EXISTING SANITARY OR STORM SEWER $\leq$ 12", REMOVE A SECTION OF PIPE AND INSTALL A TEE OR WYE CONNECTION.

4. FOR CONNECTING SANITARY SEWER SERVICE TO AN EXISTING SANITARY SEWER $\geq$ 15", CIRCULAR SAW-CUT AND USE A HUB WYE OR TEE SADDLE CONNECTION.

5. FOR PROPOSED STORM OR SANITARY SEWER SERVICES, ENCASE ALL CONNECTIONS IN LOW STRENGTH CONCRETE TO PREVENT THE FITTINGS FROM ROTATING.

6. FOR TRENCHES WITHIN AN EXISTING PAVED SURFACE AREA, CA-7 (VIRGIN CRUSHED LIMESTONE) BACKFILL SHALL BE USED.

7. FOR PROPOSED 6" STORM SEWER SUMP LINE, INSTALL PLUG AND 2" X 4" POST AT END OF LINE.

NOT TO SCALE

DATE: 4-6-2020

SANITARY AND STORM SERVICE DETAIL

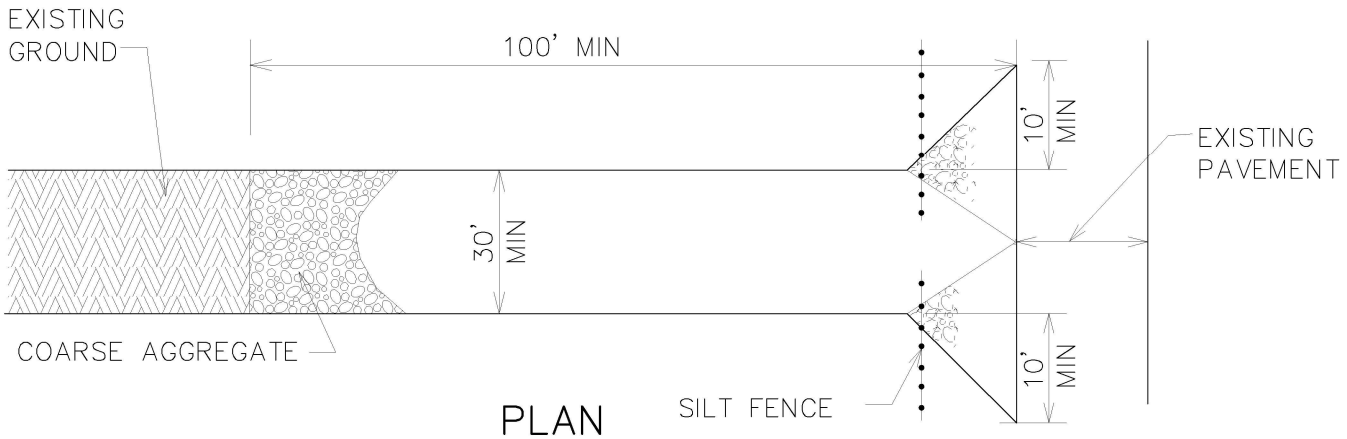

PLAN

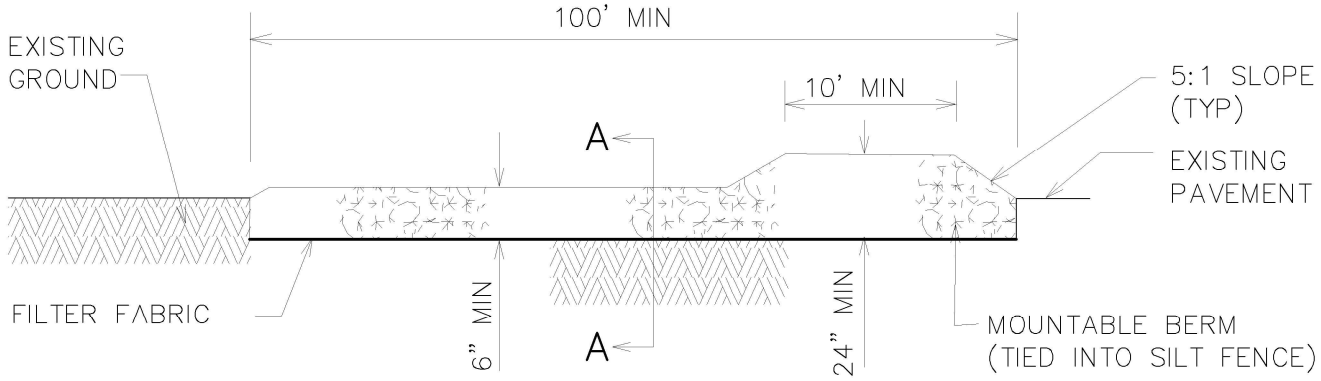

ELEVATION

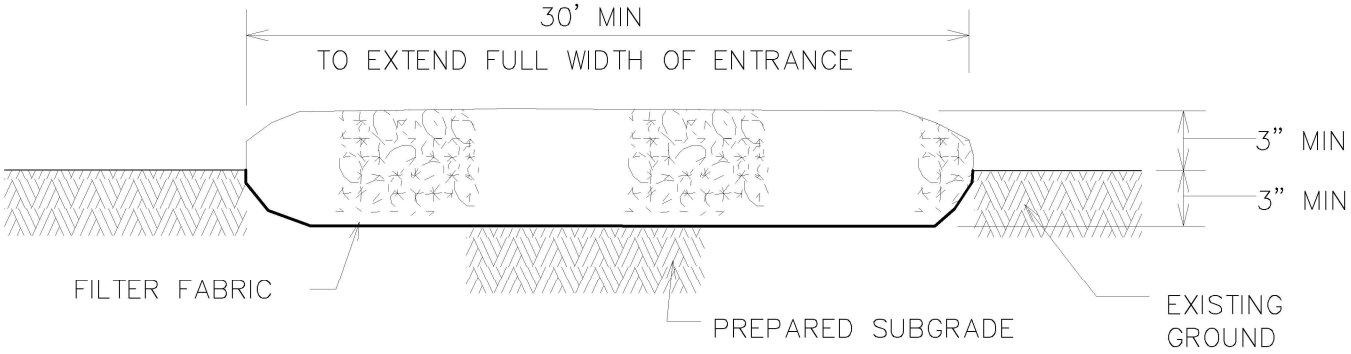

SECTION A–A

NOTES:

1. GEOTEXTILE FILTER FABRIC SHALL BE PLACED OVER THE CLEARED AREA PRIOR TO PLACING COARSE AGGREGATE
2. COARSE AGGREGATE (OR CRUSHED CONCRETE) SHALL MEET IDOT GRADATION FOR CA–1 CRUSHED AGGREGATE.
3. STABILIZED CONSTRUCTION ENTRANCE SHALL BE INSTALLED, PRIOR TO ONSET OF CONSTRUCTION OPERATIONS AND SHALL BE MAINTAINED THROUGHOUT THE PROJECT.
4. CONSTRUCTION ENTRANCE SHALL BE REMOVED UPON COMPLETION OF CONSTRUCTION AND ONLY WHEN DIRECTED BY THE CITY.

NOT TO SCALE

DATE: 4–6–2020

STABILIZED CONSTRUCTION ENTRANCE DETAIL

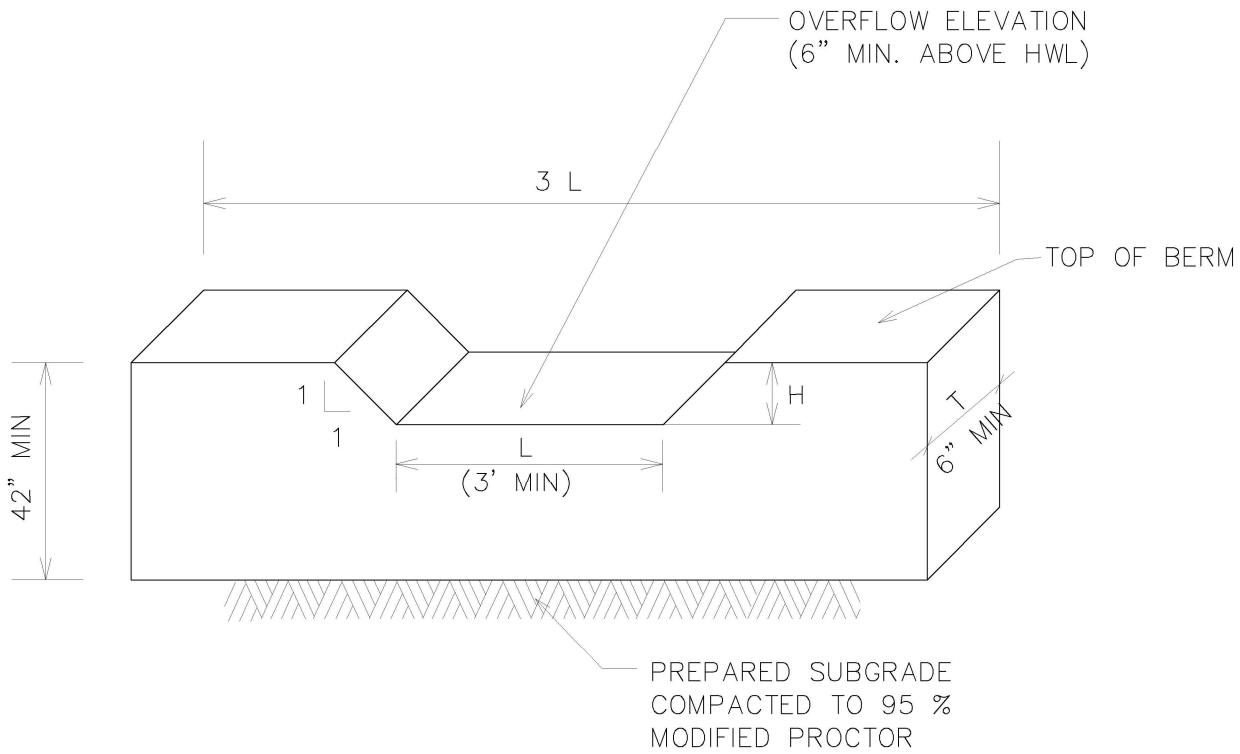

FOR DESIGN OF RECTANGULAR WEIR:

USE $Q=CLH^{3/2}$

WHERE Q= RELEASE RATE

C= 3.0 FOR BROAD-CRESTED RECTANGULAR WEIRS

L= WEIR OPENING

T= WALL THICKNESS (6" MIN)

H= HEAD (6" MIN)

USE COMPARABLE RELATIONSHIPS FOR DESIGN OF OVERFLOW STRUCTURES.

NOTES:

1. STRUCTURE TO BE CONSTRUCTED OF REINFORCED CONCRETE, IDOT CLASS SI (6.1 BAG MIX) MIN 3500 PSI AT 14 DAYS, WITH 5% TO 7% AIR ENTRAINMENT. (NO FLY ASH ALLOWED)

2. SMOOTH FINISH -1" CHAMFER ON ALL EXPOSED EDGES

3. PROVIDE MIN #4 REBARS IN FOOTING AND WEIR, 12" O.C.,E.W.

4. BACKFILL MATERIAL TO BE INORGANIC COHESIVE SOIL, COMPACTED IN MAXIMUM 12" (LOOSE) LIFTS TO AT LEAST 90% MODIFIED PROCTOR DENSITY (ASTM D-1557)

5. EROSION CONTROL MATERIAL TO BE PROVIDED IN FRONT AND REAR OF WEIR OPENING.

NOT TO SCALE

DATE: 4-6-2020

OVERFLOW (WEIR) STRUCTURE DETAIL

Minimum Restrained Lenghts (in feet) back from both sides of fitting

Fitting type/nominal size	4"	6"	8"	10"	12"	16"
90 Degree Bend	17	25	32	38	45	59
45 Degree Bend	7	10	13	16	19	24
22.5 Degree Bend	3	5	6	8	9	12
11.25 Degree Bend	2	2	3	4	4	6
Dead End	39	55	73	87	103	134
Top Side Vertical Offset * (45 Degree)	16	23	30	36	43	55
Bottom Side Vertical Offset * (45 Degree)	4	6	8	10	11	15
Tee Run X Branch ** 6" by	1	17				
Tee Run X Branch ** 8" by	1	5	34			
Tee Run X Branch ** 10" by	1	1	24	49		
Tee Run X Branch ** 12" by	1	1	15	41	65	
Tee Run X Branch ** 16" by	1	1	1	26	52	95
Reducer *** 6" by	28					
Reducer *** 8" by	52	30				
Reducer *** 10" by	71	54	29			
Reducer *** 12" by	90	75	55	51		
Reducer *** 16" by	123	113	97	94	54	

* Vertical offset with minimum 10'of solid pipe between upper and lower bend.

** Tee with MINIMUM 10' solid pipe on both sides of run.
Number indicates length of branch to be restrained.

*** Length back from Large Eng of Reducer.

DATE: 4-10-2020

WATER MAIN RESTRAINT

MOUNTABLE CONCRETE CURB & GUTTER

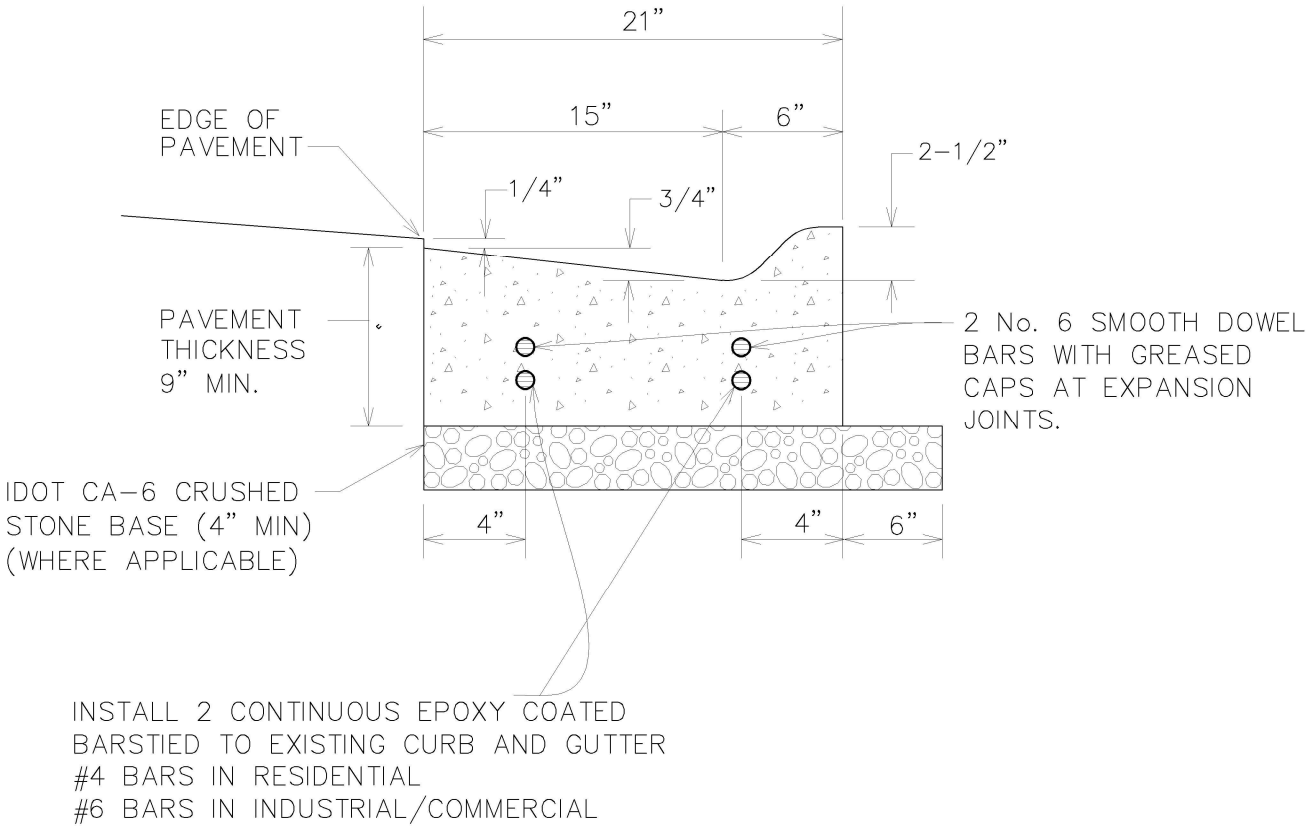

NOTES:

1. CONTRACTION JOINTS SHALL BE PLACED AT 15' INTERVALS, AND SHALL BE FORMED BY SAW CUTTING TO A DEPTH OF AT LEAST TWO INCHES. WITHIN 24 HOURS OF POURING

2. EXPANSION JOINTS SHALL BE PLACED AT 60' (MAX) INTERVALS, AT ALL POINTS OF CURVATURE, AND AT THE END OF EACH POUR.

DATE: 4-10-2020

MOUNTABLE CURB & GUTTER

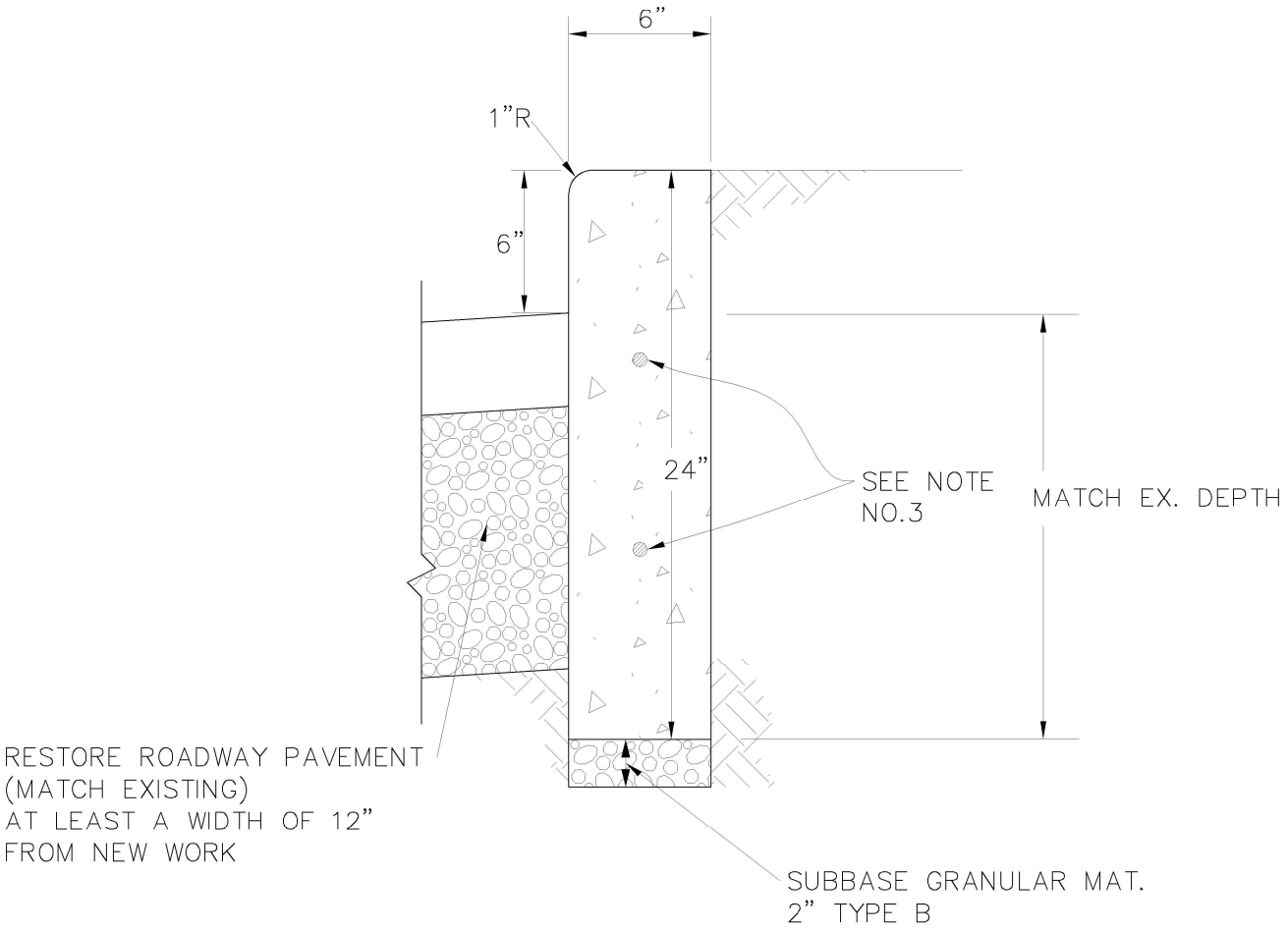

NOTES:

1. CONTRACTION JOINTS SHALL BE PLACED AT 15' INTERVALS, AND SHALL BE FORMED BY SAW CUTTING TO A DEPTH OF AT LEAST TWO INCHES.

2. EXPANSION JOINTS SHALL BE PLACED AT 60' (MAX) INTERVALS, AT ALL POINTS OF CURVATURE, AND AT THE END OF EACH POUR.

3. INSTALL 2 CONTINUOUS BARS TIED TO EXISTING CURB AND GUTTER. #4 BARS IN RESIDENTIAL, #6 BARS IN COMMERCIAL/INDUSTRIAL

NOT TO SCALE

TYPE B-6 BARRIER CURB

DATE: 4-10-2020

BRICK PAVING DETAIL

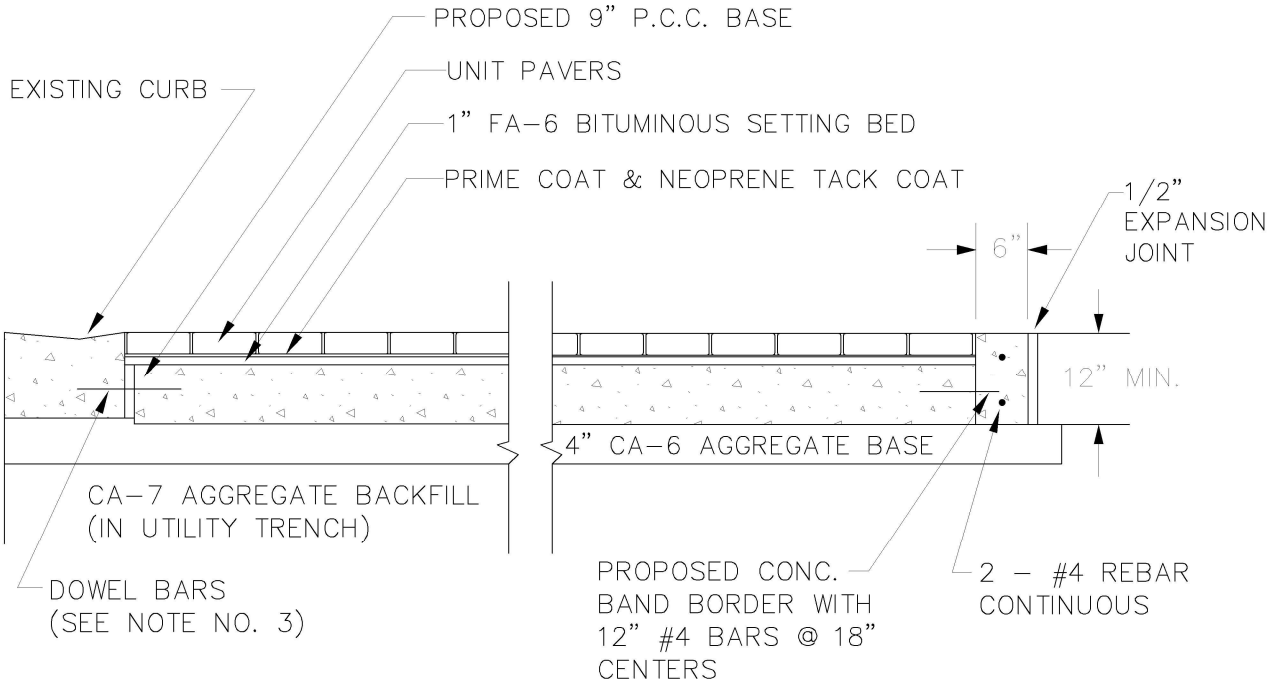

NOTES

1. PLACEMENT OF P.C.C. AND PAVING BRICKS SHALL BE DONE IN PHASES TO ENSURE THAT STREET IS OPEN TO TRAFFIC AT ALL TIMES UNLESS STREET CLOSURE IS PERMITTED BY ENGINEER.

2. P.C.C. SHALL CONSIST OF IDOT CLASS SI (6.1 BAG MIX) CONCRETE, WITH 5% TO 8% AIR ENTRAINMENT, AND A MINIMUM COMPRESSIVE STRENGTH OF 3,500 PSI AT 14 DAYS.(NO FLY ASH ALLOWED)

3. REFER TO IDOT STANDARD 442101-07 (CLASS B PATCHES) FOR DOWEL BAR AND JOINT DETAILS FOR P.C.C. BASE.

NOT TO SCALE

DATE: 1-18-12

BRICK PAVING IN ROADWAY

A. FLEXIBLE PAVEMENT

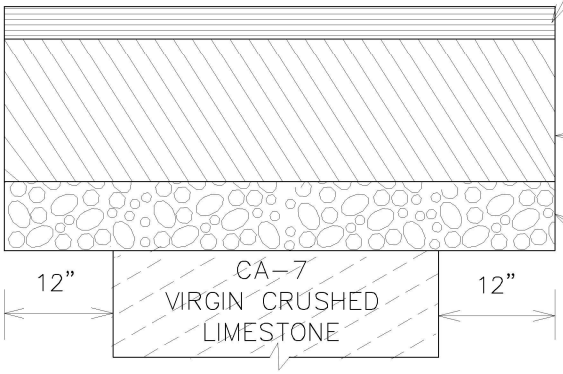

1"□ (MIN) HOT MIX ASPHALT SURFACE COURSE (PLACED ON SECOND DAY, OR AS DIRECTED BY ENGINEERING DEPARTMENT) CONFORM TO IDOT HMA MIX SELECTION TABLE

8," (MIN) HOT MIX ASPHALT OR MATCH EXISTING THICKNESS, WHICHEVER IS GREATER

4" (MIN) SUBBASE GRANULAR MATERIAL

B. RIGID PAVEMENT

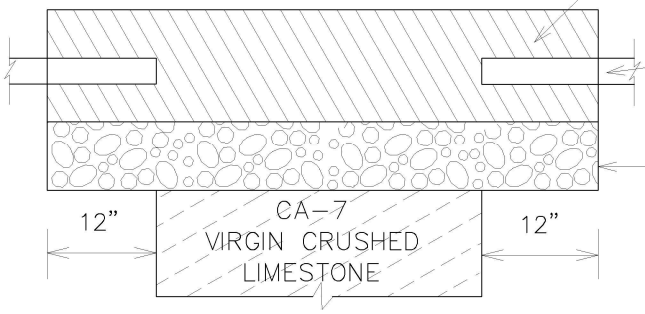

9" (MIN) PORTLAND CEMENT CONCRETE OR MATCH EXIST. THICKNESS,WHICHEVER IS GREATER

No.6 EPOXY COATED DOWEL BARS, MIN. 24" LONG GROUTED IN PLACE AT 24" C.C.

4" (MIN) SUBBASE GRANULAR MATERIAL

C. COMPOSITE PAVEMENT

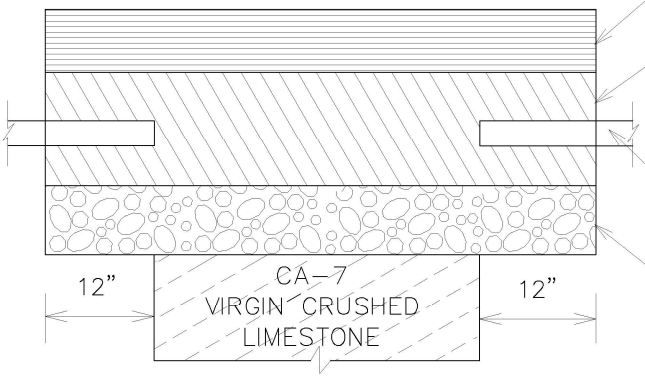

2"□ (MIN) HOT MIX ASPHALT SURFACE COURSE, CONFORM TO IDOT HMA MIX SELECTION TABLE

8" (MIN) PORTLAND CEMENT CONCRETE OR MATCH EXIST. THICKNESS,WHICHEVER IS GREATER

No.6 EPOXY COATED DOWEL BARS, MIN. 24" LONG GROUTED IN PLACE AT 24" C.C.

4" (MIN) SUBBASE GRANULAR MATERIAL

NOTE:

1. ALL PAVEMENT PATCHES SHALL BE SAWCUT FULL-DEPTH A MINIMUM OF ONE FOOT BEYOND THE LIMITS OF THE FAILED PAVEMENT IN ALL DIRECTIONS.
2. PORTLAND CEMENT CONCRETE SHALL CONFORM TO IDOT CLASS PP MIN. 3,500 PSI (6.1 BAG MIX) AT 14 DAYS, WITH 5 % TO 7 % AIR ENTRAINMENT.(NO FLY ASH ALLOWED)

NOT TO SCALE

DATE: 4-10-2020

PAVEMENT PATCH DETAIL

A. FLEXIBLE PAVEMENT

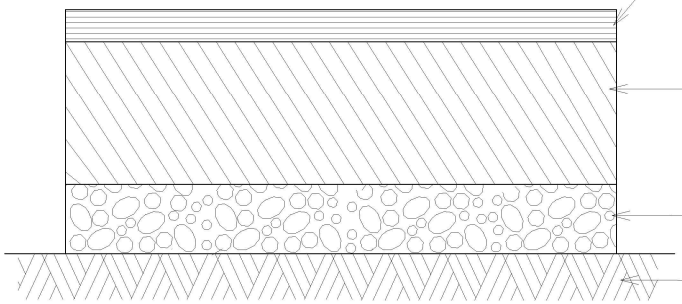

B. RIGID PAVEMENT

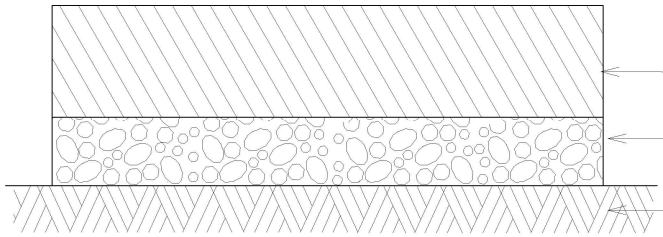

C. COMPOSITE PAVEMENT

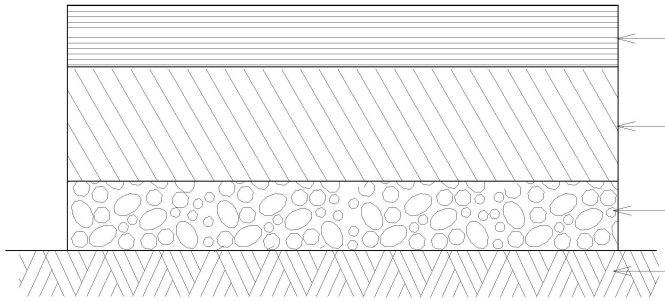

NOTE:

SECTIONS REPRESENT THE MINIMUM CROSS SECTION ALLOWED.

1. HOT MIX ASPHALT SURFACE & BINDER COURSE SHALL CONFORM TO IDOT HMA MIX SELECTION TABLE.
2. PORTLAND CEMENT CONCRETE SHALL CONFORM TO IDOT CLASS PV, MIN. 3500 PSI (6.1 BAG MIX) AT 14 DAYS. WITH 5% TO 8% AIR ENTRAINMENT. (NO FLY ASH ALLOWED)
3. ALL SUBGRADE SHALL HAVE A MINIMUM ILLINOIS BEARING RATIO (IBR) OF 3.0, AND BE COMPACTED TO AT LEAST 90% MODIFIED PROCTOR DENSITY (ASTM D-1557)

NOT TO SCALE

DATE: 4-10-2020

MINIMUM PAVEMENT DETAILS

DEPRESSED CURB

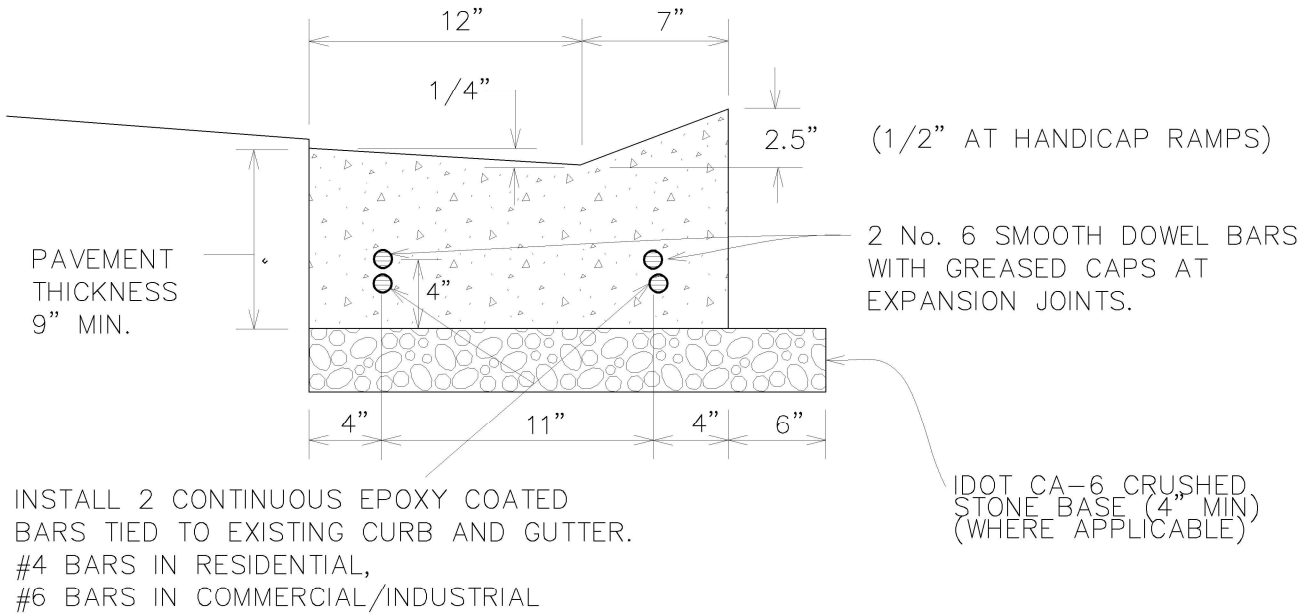

B6.12 CURB & GUTTER

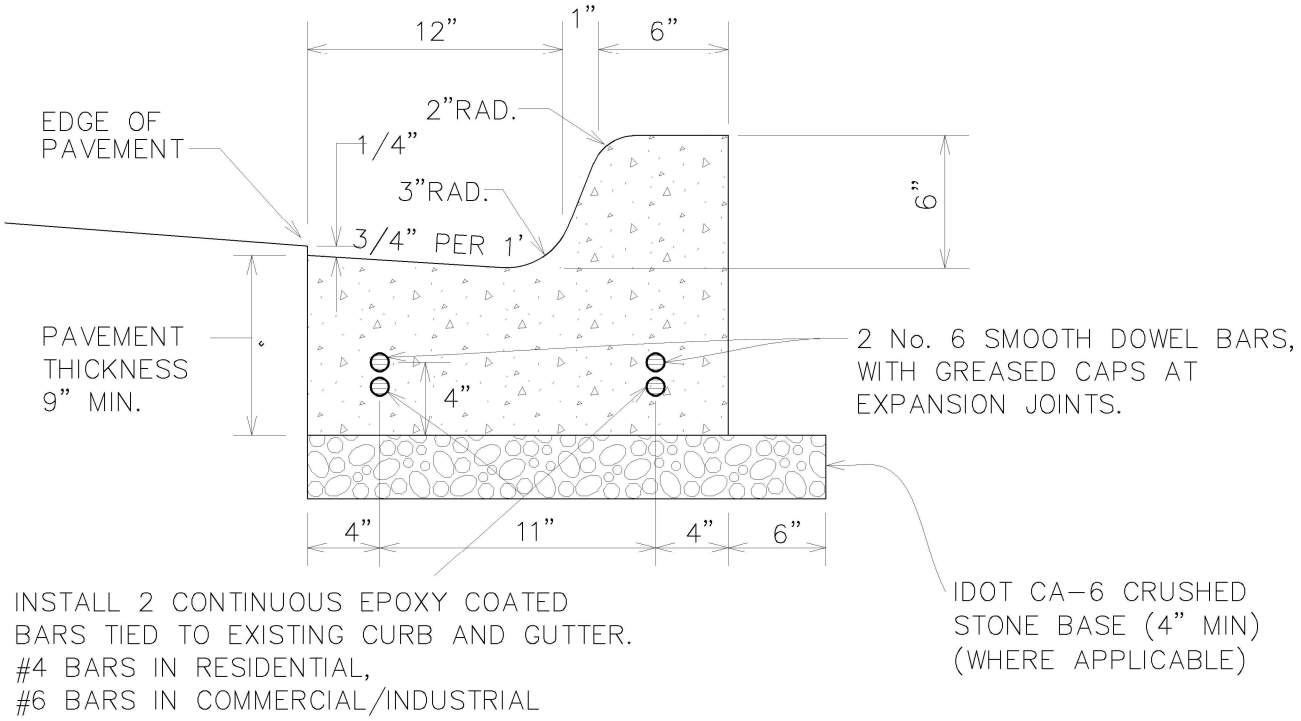

NOTES:

1. CONTRACTION JOINTS SHALL BE PLACED AT 15' INTERVALS, AND SHALL BE FORMED BY SAW CUTTING TO A DEPTH OF AT LEAST TWO INCHES. WITHIN 24 HOURS OF POURING

2. EXPANSION JOINTS SHALL BE PLACED AT 60' (MAX) INTERVALS, AT ALL POINTS OF CURVATURE, AND AT THE END OF EACH POUR.

DATE: 4-10-2020
NOT TO SCALE

B6.12 COMB. CONCRETE CURB AND GUTTER (SPECIAL)
B6.12 P.C.C. INTEGRAL CURB AND GUTTER (SPECIAL)

4" PIPE UNDERDRAIN PLAN

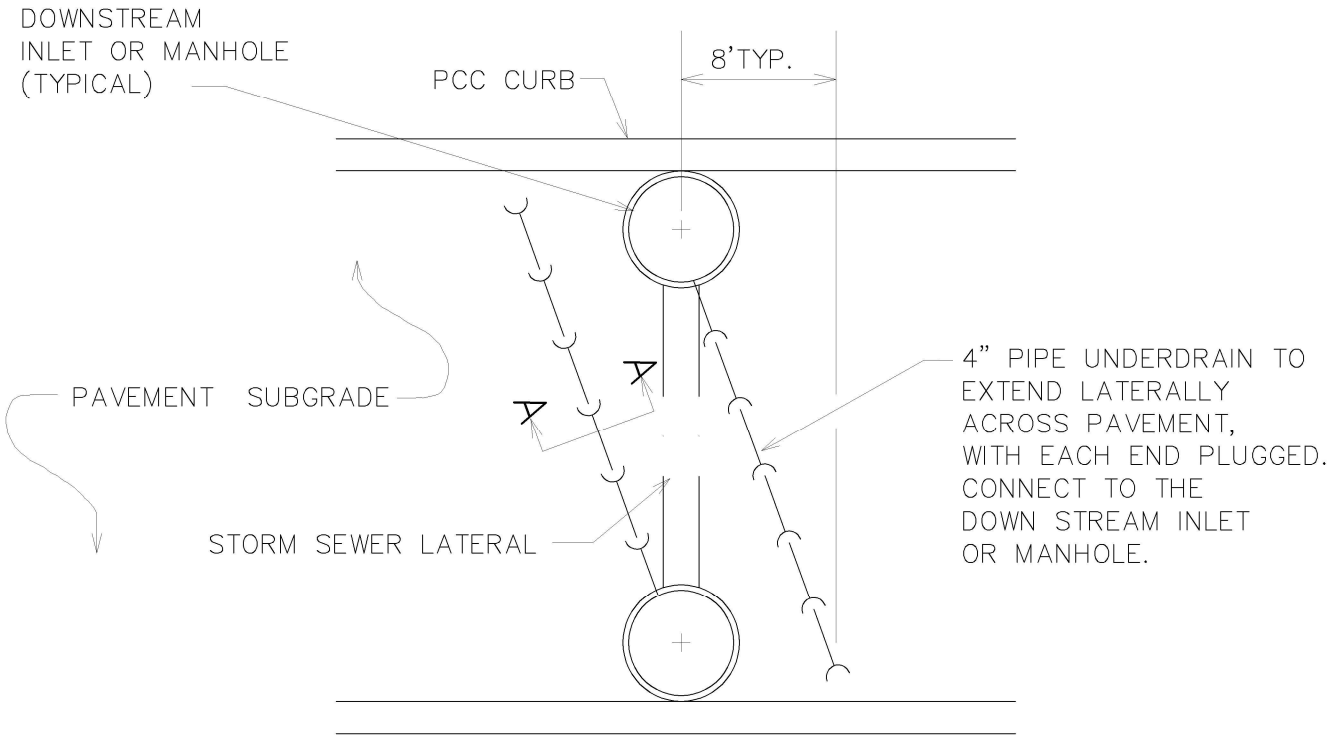

SECTION A–A

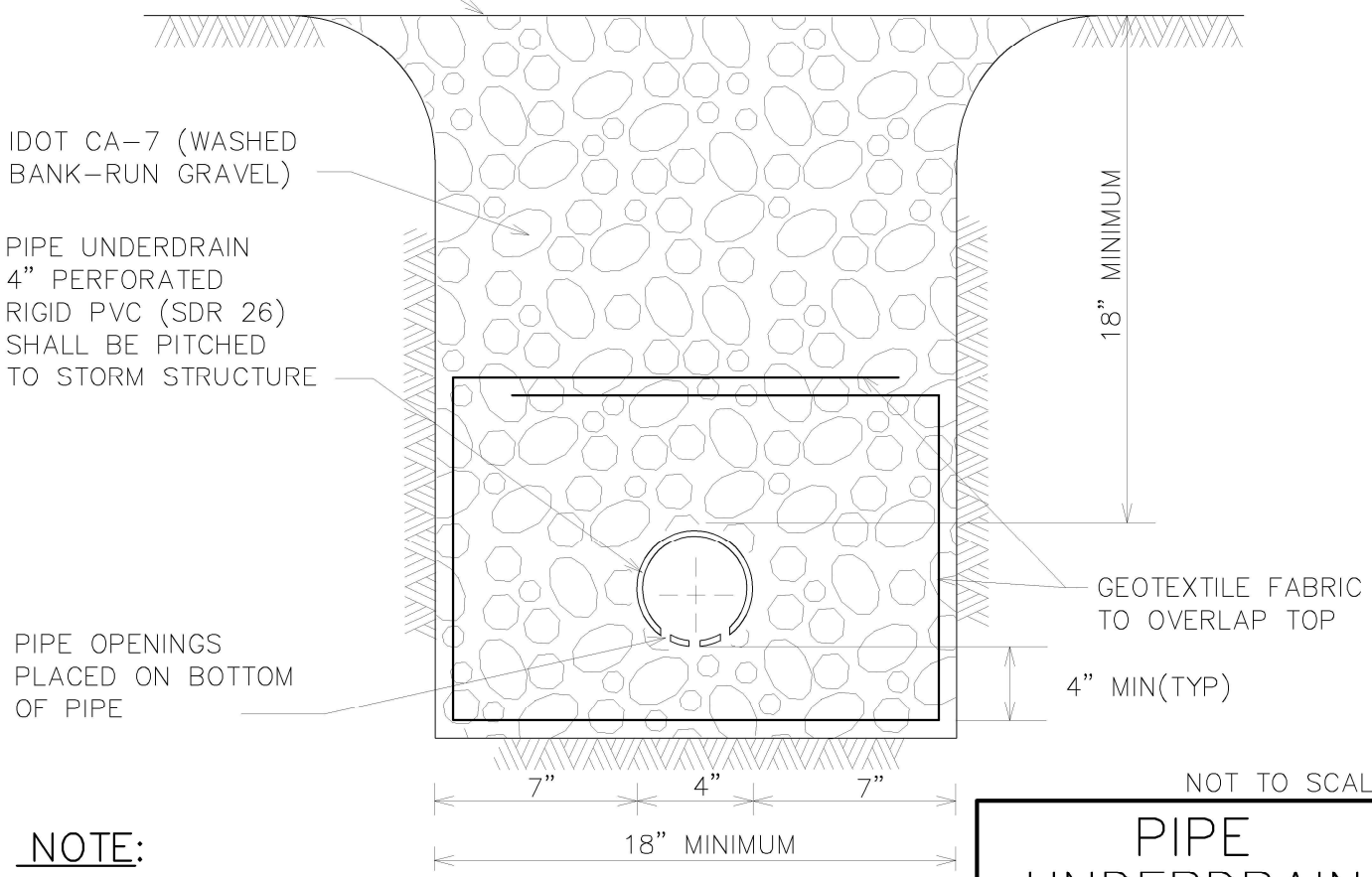

NOT TO SCALE

NOTE:

UNDERDRAIN TO BE INSTALLED BELOW ALL NEW ROADWAYS

DATE: 4–10–2020

PIPE UNDERDRAIN DETAIL

BRICK PAVING DETAIL

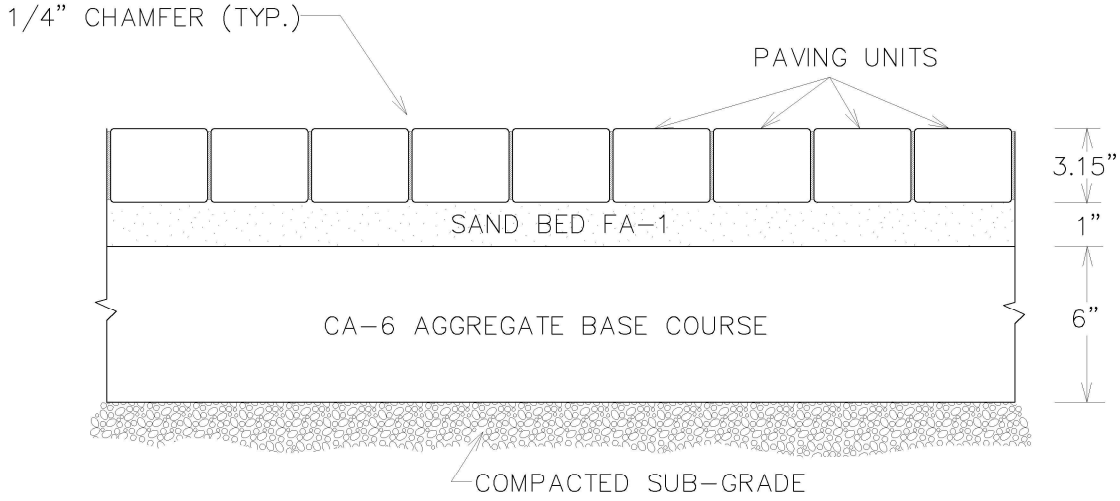

NOTES

1. THE FA-1 SAND FOR THE BEDDING LAYER SHALL BE DELIVERED TO THE SITE A MINIMUM OF 24 HOURS PRIOR TO PLACEMENT TO ALLOW FOR THE MOISTURE TO DRAIN FROM THE MATERIAL.

2. THE SAND BED SHALL BE COMPACTED PRIOR TO PLACEMENT OF THE PAVER BRICKS. DISTURBED AREAS OR SCREEDED AREAS LEFT OVERNIGHT SHALL BE REMOVED AND RESCREEDED. FOLLOWING THE PLACEMENTOF THE PAVER BRICKS, FA-1 SAND SHALL BE SPREAD ACROSS THE SURFACE OF THE SURFACE OF THE PAVERS AND COMPACTED WITH A VIBRATORY PLATE COMPACTOR.

3. THE BASE COURSE SHALL BE CONSTRUCTED OF CA-6 MATERIAL COMPACTED IN TWO LIFTS.

4. EDGE RESTRAINT SHALL BE PROVIDED ON ALL SIDES OF THE PAVER CONSTRUCTION IN THE FORM OF STANDARD CURB AND GUTTER, SIDEWALK, OR THE TYPICAL EDGE RESTRAINT SHOWN ABOVE

5. UNDERCUTS AND THE CONSTRUCTION OF A SUBBASE SHALL OCCUR AS NECESSARY TO ENSURE THE STRUCTURAL STABILITY OF THE ROADWAY.

NOT TO SCALE

DATE: 4-13-2020

BRICK PAVING DETAIL

COMMERCIAL DRIVEWAY DETAIL

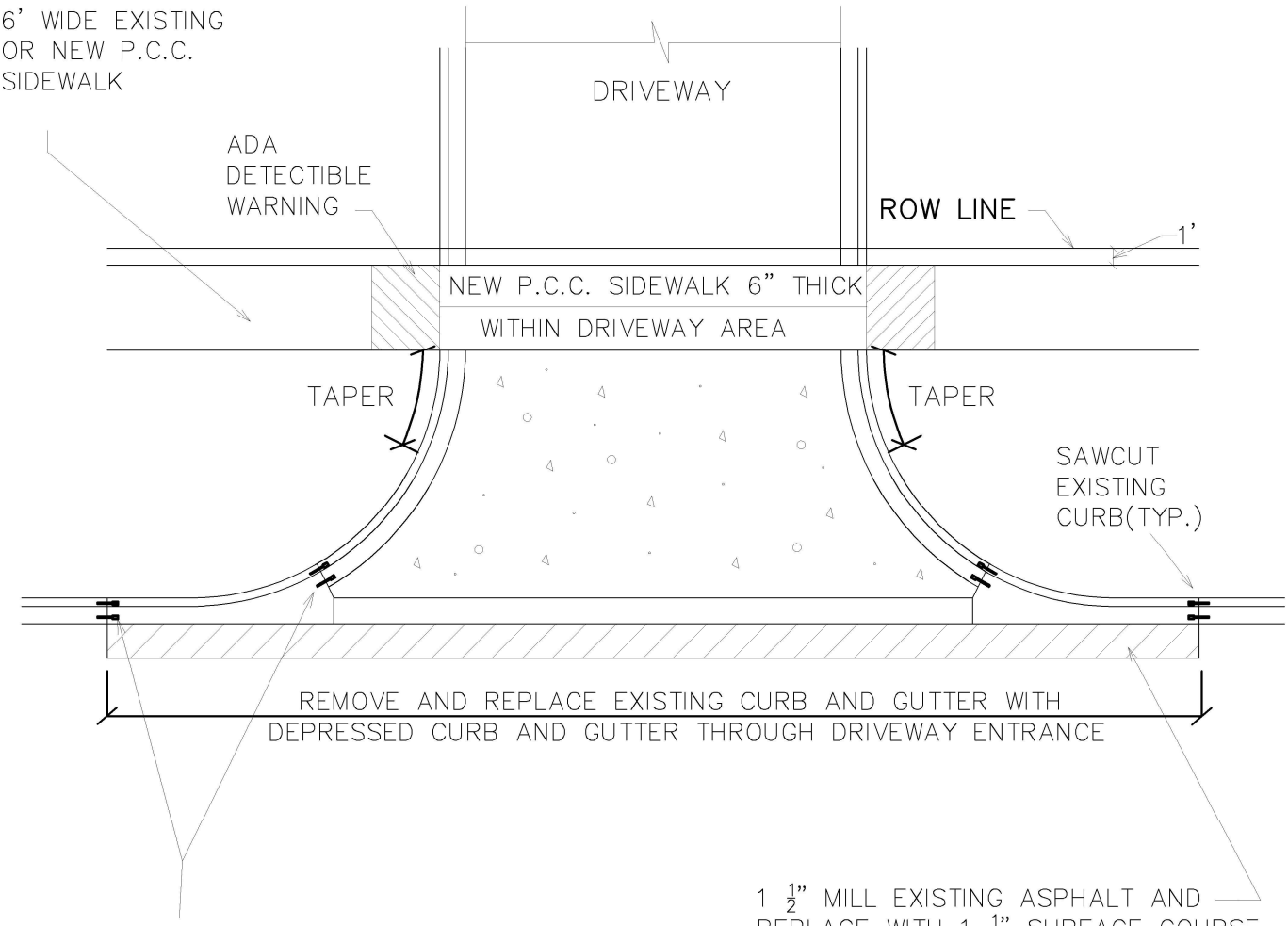

NOTES:

1. FOR P.C.C. DRIVEWAY OVER AN UNDERGROUND UTILITY TRENCH, PLACE 6X6 – W2.9XW2.9 WELD AND WIRE FABRIC AT MID-DEPTH OF THE CONCRETE.
2. THE MAXIMUM DRIVEWAY WIDTH AT THE RIGHT-OF-WAY IS 25' AND 33' AT THE CURB. TWO 25' WIDE DRIVEWAYS (ENTRANCE AND EXIT) ARE ALLOWED IF SEPARATED BY A LANDSCAPED ISLAND
3. P.C.C. CONCRETE DRIVEWAYS:
   APPROACH– 6" (MIN) PORTLAND CEMENT CONCRETE AND
   4" (MIN) IDOT CA-6 CRUSHED STONE
4. BITUMINOUS DRIVEWAYS:
   APPROACH– 4" (MIN) BITUMINOUS CONCRETE AND
   6" (MIN) IDOT CA-6 CRUSHED STONE AND
5. MAINTAIN FULL SIDEWALK WIDTH THROUGH DRIVEWAYS UNLESS DIRECTED OTHERWISE BY CITY ENGINEER. CURBING SHALL NOT RUN THROUGH SIDEWALK AREAS IN DRIVEWAYS.

NOT TO SCALE

DATE: 4-30-2020

COMMERICAL DRIVEWAY DETAIL

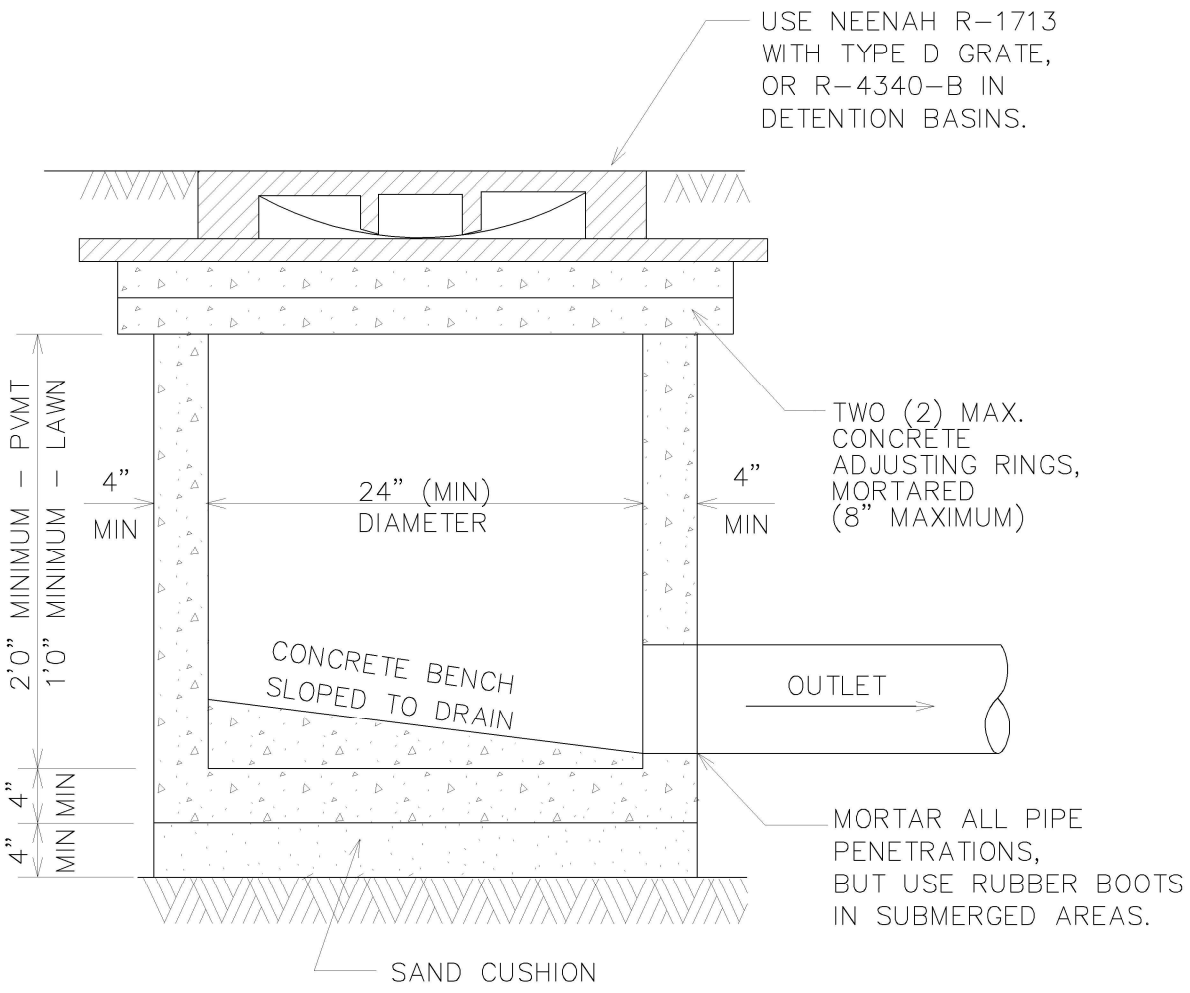

NOTE:

1. INLET TO BE CONSTRUCTED OF PRECAST REINFORCED CONCRETE.

2. INLET MUST CONFORM TO ASTM C-478.

3. NON-PRECAST OPENINGS SHALL BE CORED AND RUBBER BOOTED.

4. MAXIMUM DEPTH FROM INVERT OF OUTLET PIPE TO TOP OF FRAME SHALL NOT EXCEED 42 INCHES. IF DESIGN OR CONSTRUCTION REQUIRES DEPTH BEYOND 42 INCHES, STRUCTURE SHALL BE REVISED TO A 48 INCH DIAMETER TYPE A MANHOLE.

NOT TO SCALE

DATE: 4-8-2020

TYPE A INLET DETAIL

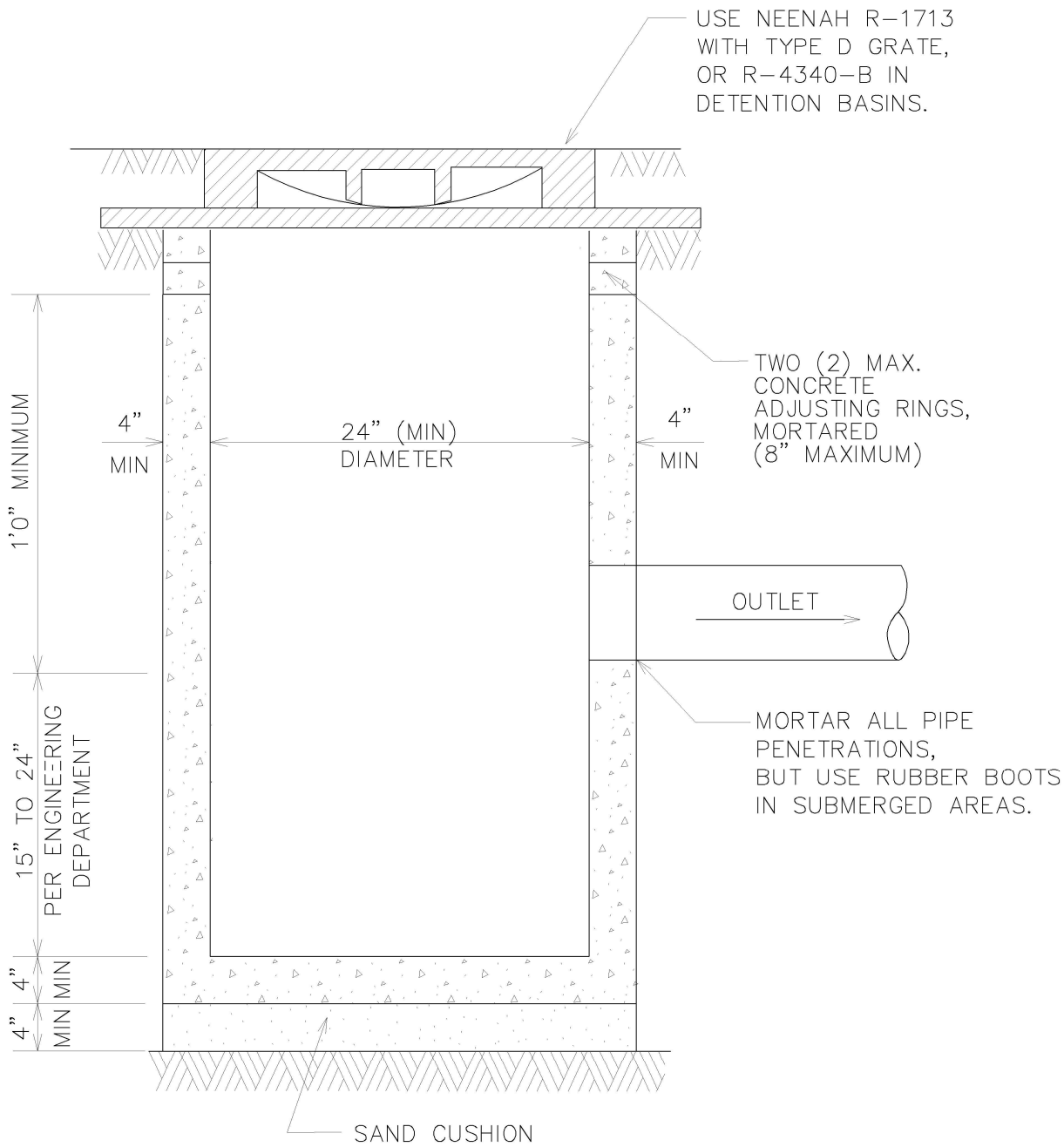

NOTE:

1. CATCH BASIN TO BE CONSTRUCTED OF PRECAST REINFORCED CONCRETE.
2. CATCH BASIN MUST CONFORM TO ASTM C-478.
3. NON-PRECAST OPENINGS SHALL BE CORED AND RUBBER BOOTED.
4. MAXIMUM DEPTH FROM INVERT OF OUTLET PIPE TO TOP OF FRAME SHALL NOT EXCEED 42 INCHES. IF DESIGN OR CONSTRUCTION REQUIRES DEPTH BEYOND 42 INCHES, STRUCTURE SHALL BE REVISED TO A 48 INCH DIAMETER TYPE A CATCH BASIN.

NOT TO SCALE

TYPE C CATCH BASIN DETAIL

DATE: 4-8-2020

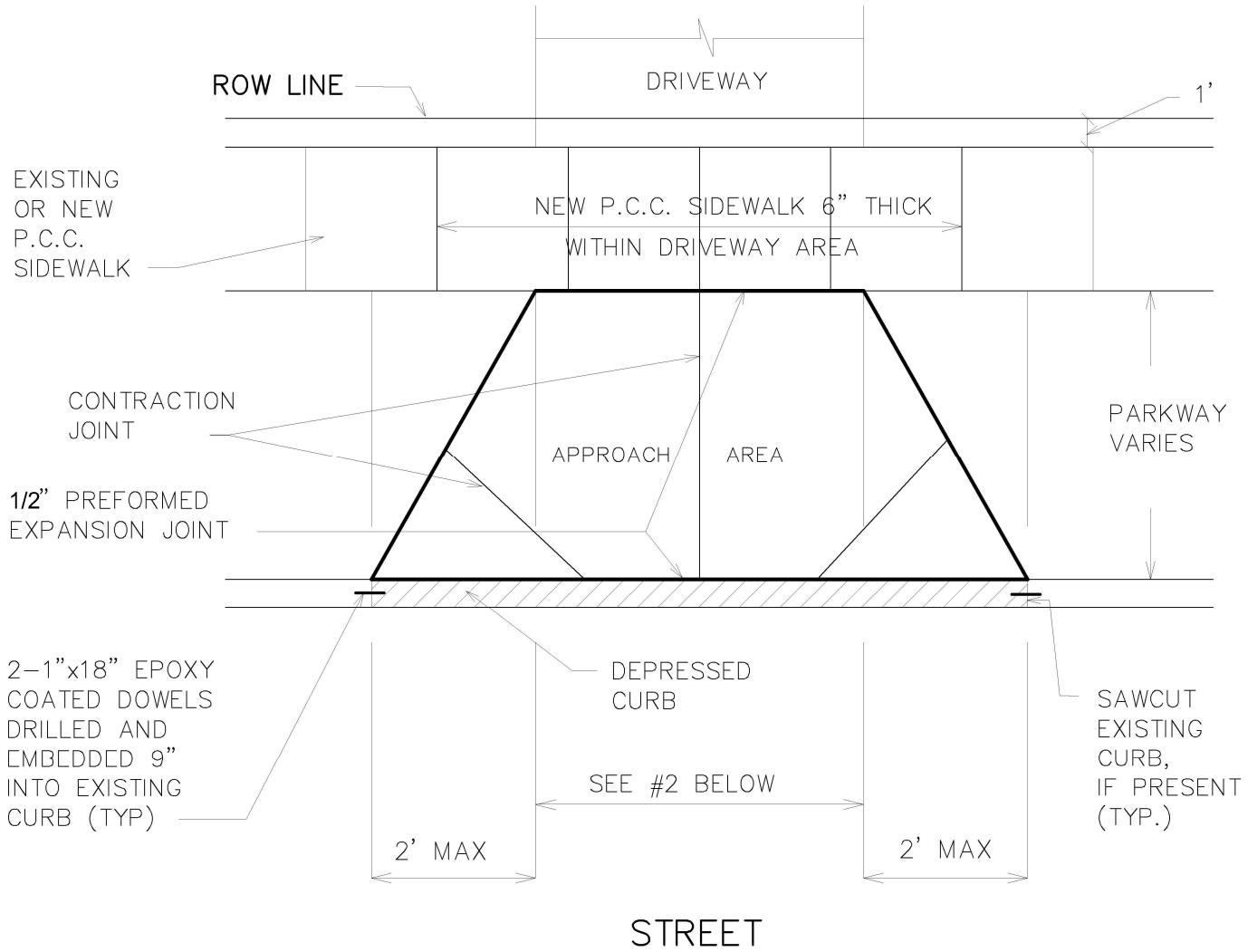

NOTES:

1. FOR P.C.C. DRIVEWAY OVER AN UNDERGROUND UTILITY TRENCH, PLACE 6X6 – W2.9XW2.9 WELD AND WIRE FABRIC AT MID-DEPTH OF THE CONCRETE.
2. THE MAXIMUM DRIVEWAY WIDTH AT THE RIGHT-OF-WAY IS 25' (SINGLE FAMILY HOMES) AND 33' AT THE CURB.
   THE MAXIMUM DRIVEWAY WIDTH AT THE RIGHT-OF-WAY SHALL BE 29' (FOR DUPLEX UNITS) AND 33' AT THE CURB.
3. P.C.C. CONCRETE DRIVEWAYS:
   APPROACH- 6" (MIN) PORTLAND CEMENT CONCRETE AND
   4" (MIN) IDOT CA-6 CRUSHED STONE
   DRIVEWAY- 5"(MIN) PORTLAND CEMENT CONCRETE AND
   4" (MIN) IDOT CA-6 CRUSHED STONE
4. BITUMINOUS DRIVEWAYS:
   APPROACH- 6" (MIN) IDOT CA-6 CRUSHED STONE AND
   3" (MIN) BITUMINOUS CONCRETE
   DRIVEWAY- 4" (MIN) IDOT CA-6 CRUSHED STONE AND
   3" (MIN) BITUMINOUS CONCRETE
5. MAINTAIN FULL SIDEWALK WIDTH THROUGH DRIVEWAYS UNLESS DIRECTED OTHERWISE BY CITY ENGINEER. CURBING SHALL NOT RUN THROUGH SIDEWALK AREAS IN DRIVEWAYS.

NOT TO SCALE

DRIVEWAY DETAIL

DATE: 4-10-2020

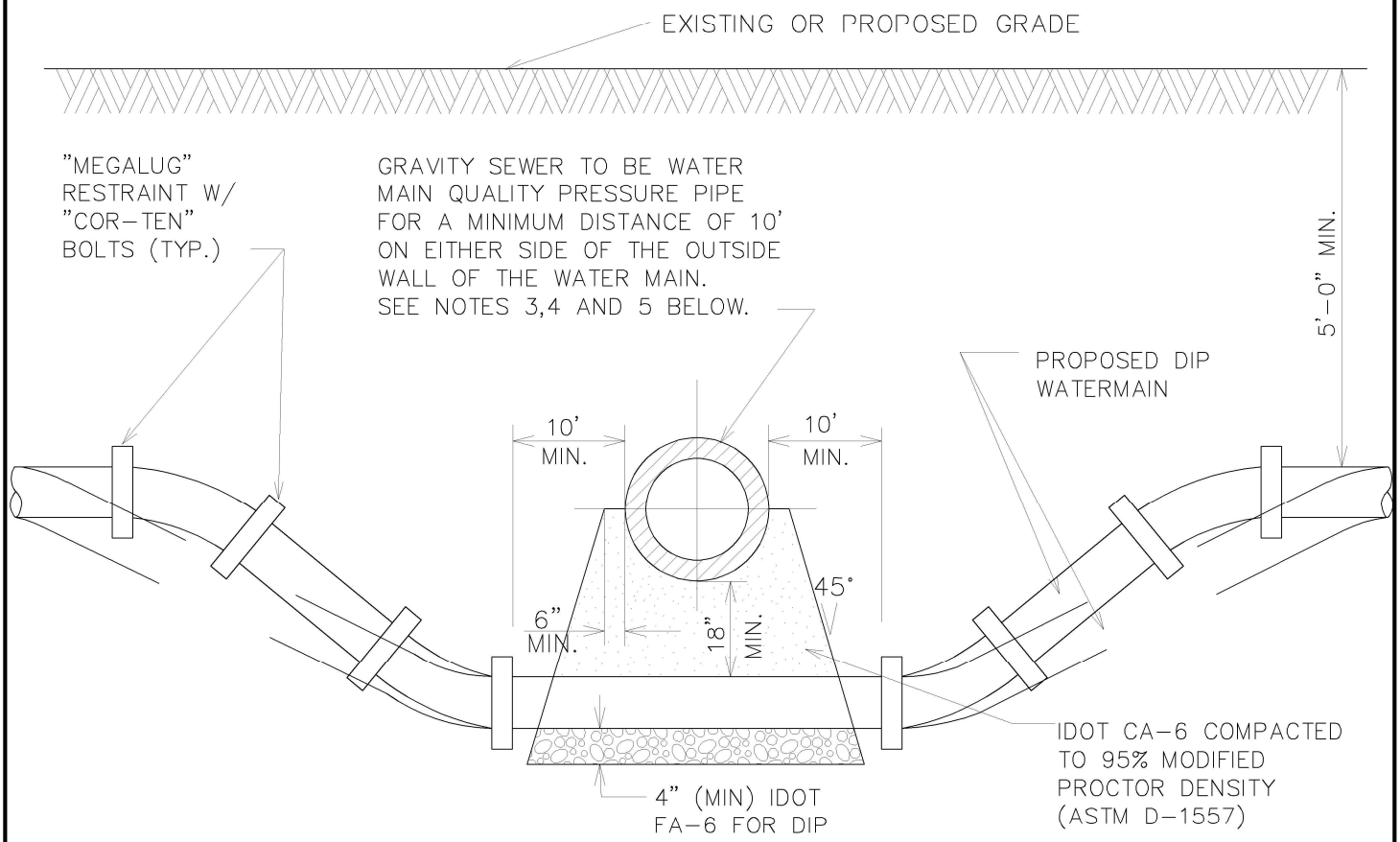

NOTES:

1. HORIZONTAL AND VERTICAL SEPARATION BETWEEN WATERMAINS AND SEWERS SHALL COMPLY WITH APPLICABLE SECTIONS OF THE CITY OF WOODSTOCK PUBLIC IMPROVEMENT STANDARDS AND DETAILS OR IEPA REQUIREMENTS, WHICHEVER IS MORE STRINGENT.

2. CONTRACTOR MAY BEND WATER MAIN PIPE UNIFORMLY UNDER SEWERS WITHOUT USING FITTINGS, PROVIDED THAT JOINT DEFLECTION DOES NOT EXCEED 5 DEGREES PER JOINT FOR PIPE UNDER 14" IN DIAMETER AND 3 DEGREES PER JOINT FOR PIPE 14" AND OVER IN DIAMETER. IF FITTINGS ARE USED, CONTINUOUS STRAPPING WITH RODS, STRAPS, NUTS AND BOLTS BELOW NORMAL WATERMAIN DEPTH ARE REQUIRED, OR RETAINER GLANDS MAY BE USED IN LIEU OF STRAPPING. RETAINER GLANDS TO BE CLOW No. F-1058 OR APPROVED EQUAL.

3. ALL SANITARY SEWER (INCLUDING SERVICE) CROSSINGS WHERE THE WATER MAINS OR WATER SERVICES ARE LESS THAN 18" VERTICALLY ABOVE THE SEWER SHALL BE POLYVINYL CHLORIDE PRESSURE PIPE (SDR 26-160 PSI) AND SHALL CONFORM WITH THE LATEST REVISION OF ASTM D- 2241. JOINTS SHALL CONFORM TO ASTM D-3139 AND ELASTOMERIC GASKETS SHALL CONFORM TO ASTM F-477. THE SAME PIPE AND JOINT MATERIALS SHALL BE USED WHENEVER WATER MAIN CROSSES BELOW THE SEWER.

4. ALL STORM SEWER (INCLUDING SERVICE) CROSSINGS WHERE THE WATER MAINS ARE LESS THAN 18" VERTICALLY ABOVE THE SEWER SHALL BE REINFORCED CONCRETE PIPE, ASTM C-361, CLASS D-25, WITH BELL AND SPIGOT JOINTS AND RUBBER GASKETS, OR PVC SDR 26 AS SPECIFIED IN NOTE 3 ABOVE. THE SAME PIPE AND JOINT MATERIAL SHALL BE USED WHENEVER WATER MAIN CROSSES BELOW THE SEWER.

5. FOR NEW SEWER INSTALLATIONS CROSSING OVER WATER MAINS, THE ENTIRE RUN OF NEW SEWER SHALL BE WATER MAIN QUALITY PIPE, EXTENDING FROM STRUCTURE TO STRUCTURE ON EACH SIDE OF THE CROSSING.

NOT TO SCALE

DATE: 4-8-2020

WATER MAIN CROSSING DETAIL

CONTRACTION JOINT DETAIL

EXPANSION JOINT DETAIL

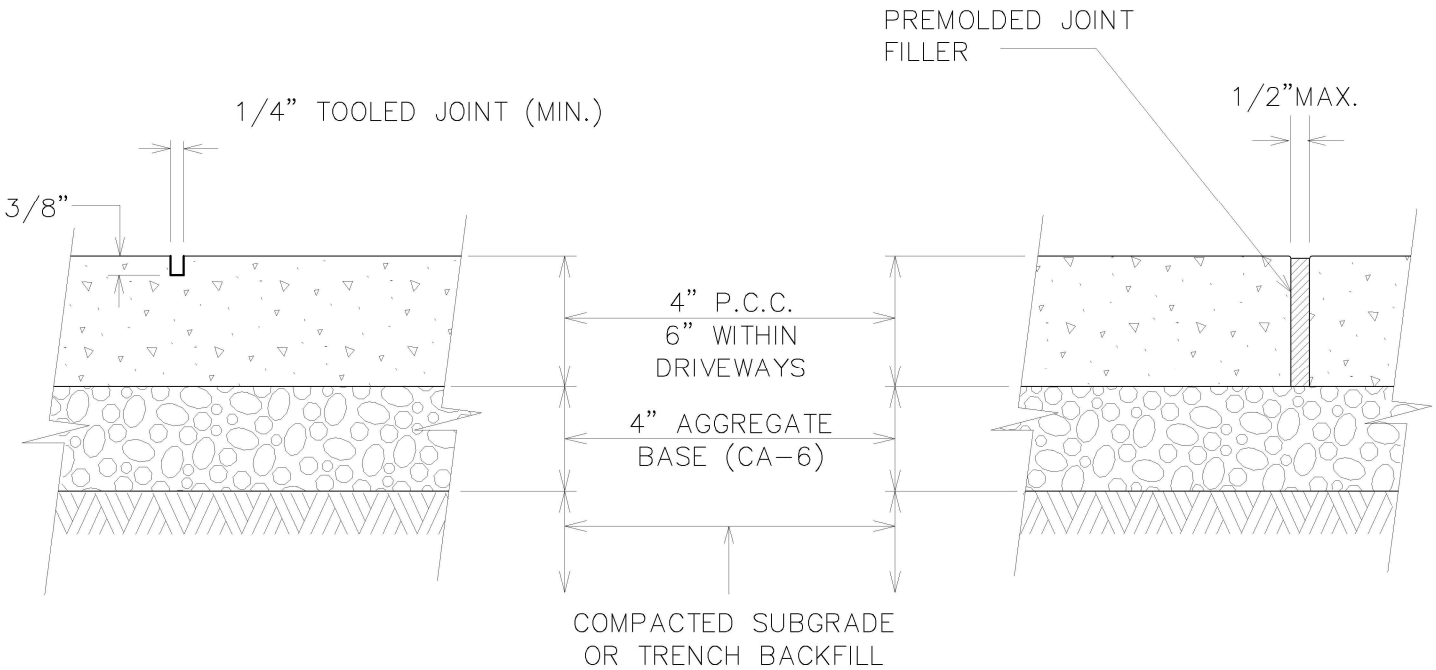

NOTES:

1. UNLESS OTHERWISE NOTED ON PLANS, CONTRACTION JOINTS TO BE AT 5'-0" O.C.

2. EXPANSION JOINTS TO BE 50'-0" O.C. MAX. OR AT BACK OF CURB, CHANGE OF DIRECTION, OTHER WALK, UTILITY APPURTENANCE, OR FACE OF STRUCTURE.

NOT TO SCALE

CONCRETE WALK JOINT DETAILS

DATE: 4-10-2020

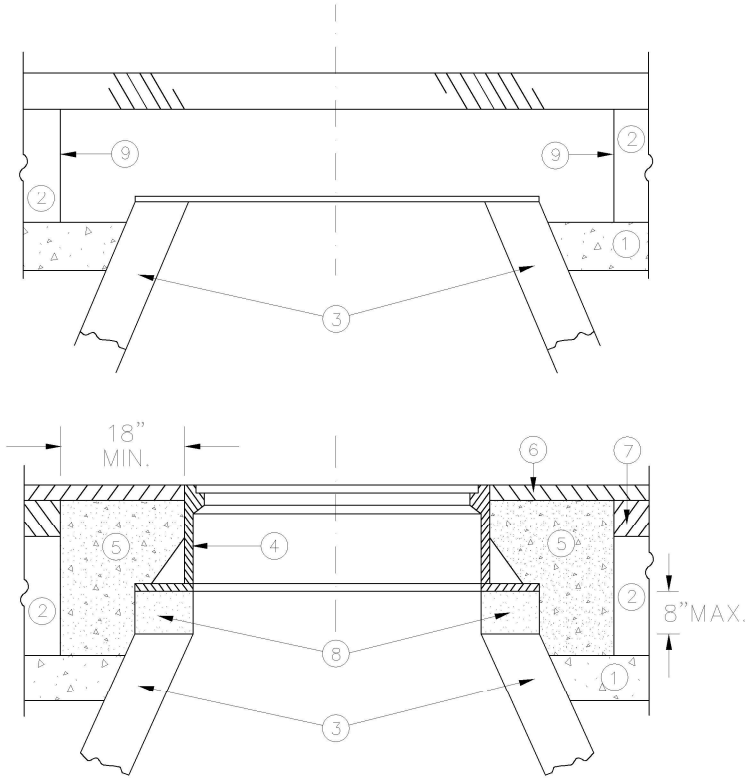

LEGEND

1. SUB-BASE GRANULAR MATERIAL
2. EXISTING PAVEMENT TO BE REMOVED
3. EXISTING STRUCTURE
4. FRAME AND LID (SEE NOTES)
5. CLASS SI CONCRETE
6. PROPOSED HMA SURFACE COURSE
7. PROPOSED HMA BINDER COURSE
8. PROPOSED MORTAR, STEEL SHIMS & ADJUSTING RINGS 8" MAXIMUM
9. FULL DEPTH SAW CUT

NOTES:

EXISTING FRAMES AND LIDS ARE THE PROPERTY OF THE CITY OF WOODSTOCK & SHALL BE REMOVED AND RETURNED TO THE CITY OF WOODSTOCK BY THE CONTRACTOR AND SHALL BE REPLACED AS NOTED ON PLAN.

INSTALLATION OF NEW FRAMES & LIDS WILL NOT BE PAID FOR SEPARATELY BUT ARE INCLUDED AS PART OF THE COST PER NEW STRUCTURE.

CONSTRUCTION PROCEDURES

PRIOR TO PAVING SURFACE COURSE:

A) FULL DEPTH SAW CUT 5' X 5' SQUARE OR DIAMOND AROUND CENTER OF FRAME TO BE ADJUSTED

B) REMOVE FRAME, EXISTING PAVEMENT AND AGGREGATE MATERIAL TO A DEPTH OF 2" BELOW TOP OF MANHOLE STRUCTURE & 2" BELOW BOTTOM OF LOWEST ADJUSTMENT RING.

C) INSTALL NEW FRAME AND LID TO MATCH PROPOSED HMA PAVEMENT SURFACE GRADE USING MORTAR, STEEL SHIMS EMBEDDED IN MORTAR, AND PRECAST CONCRETE ADJUSTING RINGS.

C) COMPACT EXISTING AGGREGATE STONE BASE.

D) FILL 5'X5' SURROUNDING SPACE WITH IDOT APPROVED CLASS SI CONCRETE TO THE SAME ELEVATION OF THE TOP OF THE BINDER COURSE.

E) PAVE SURFACE COURSE OVER 5'X 5' CONCRETE COLLAR.

THE PROCEDURE EXPLAINED ABOVE SHALL CONFORM TO THE APPLICABLE PORTIONS OF SECTIONS 353, 406, 602, AND 603 OF THE STANDARD SPECIFICATIONS

NOT TO SCALE

FRAME AND LID ADJUSTMENT WITH CONCRETE COLLAR

DATE: 4-10-2020

PLANTING GUIDELINES

10' TYP

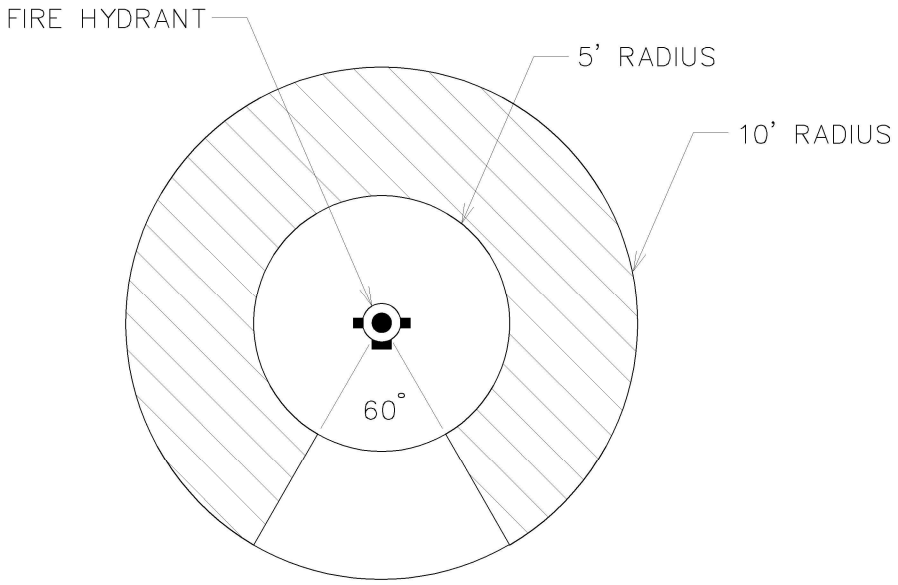

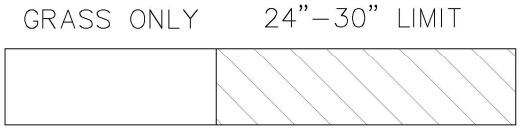

VEGETATION HEIGHT LIMITS ARE FOR MATURE PLANTS

VEGETATION RESTRICTION NOTES:

1. AREA AROUND THE HYDRANT 5 FEET IN RADIUS SHALL REMAIN FREE OF ALL VEGETATION EXCEPT FOR GRASS.
2. AREA AROUND THE HYDRANT FROM 5 FEET TO 10 FEET MAY HAVE VEGETATION WITH A 24" TO 30" HEIGHT EXCEPT FOR THAT PORTION OF THE AREA IN FRONT OF THE HYDRANT CREATING A 60 °ARC.

NOT TO SCALE

DATE: 4–10–2020

PLANTING GUIDLINES

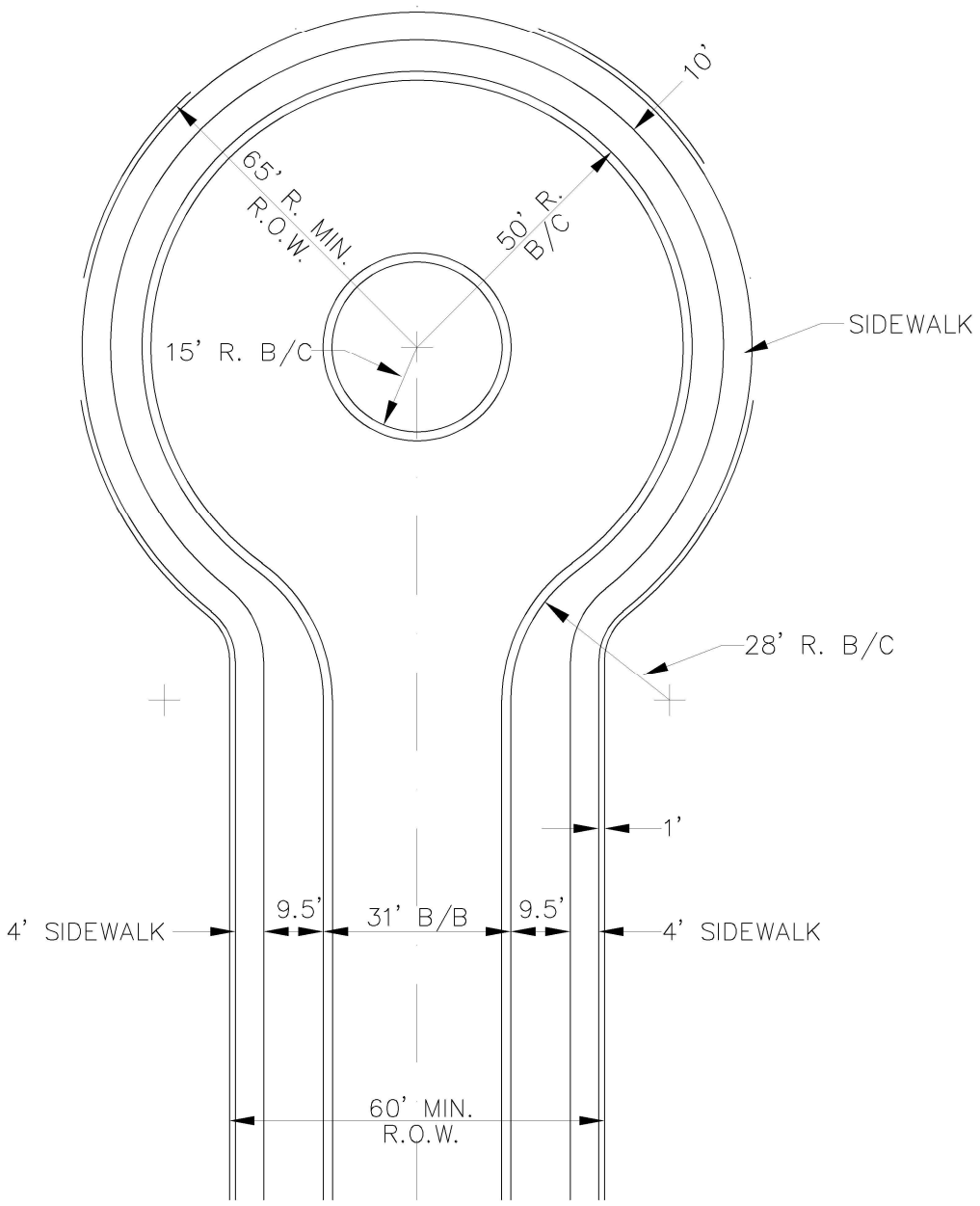

NOTES:

1.) ISLANDS ARE OPTIONAL AT THE DISCRETION OF THE CITY.

2.) FIRE HYDRANTS AND STREET LIGHTS SHALL BE LOCATED IN THE THROAT OF THE CUL-DE-SAC AND NOT THE BULB UNLESS DIRECTED BY THE CITY

3.) ALL DRIVEWAYS ON CUL-DE-SACS MUST HAVE A MINIMUM OF 10' SEPARATION AT THE CURB LINE

NOT TO SCALE

CONCENTRIC CUL-DE-SAC

DATE: 4-13-2020

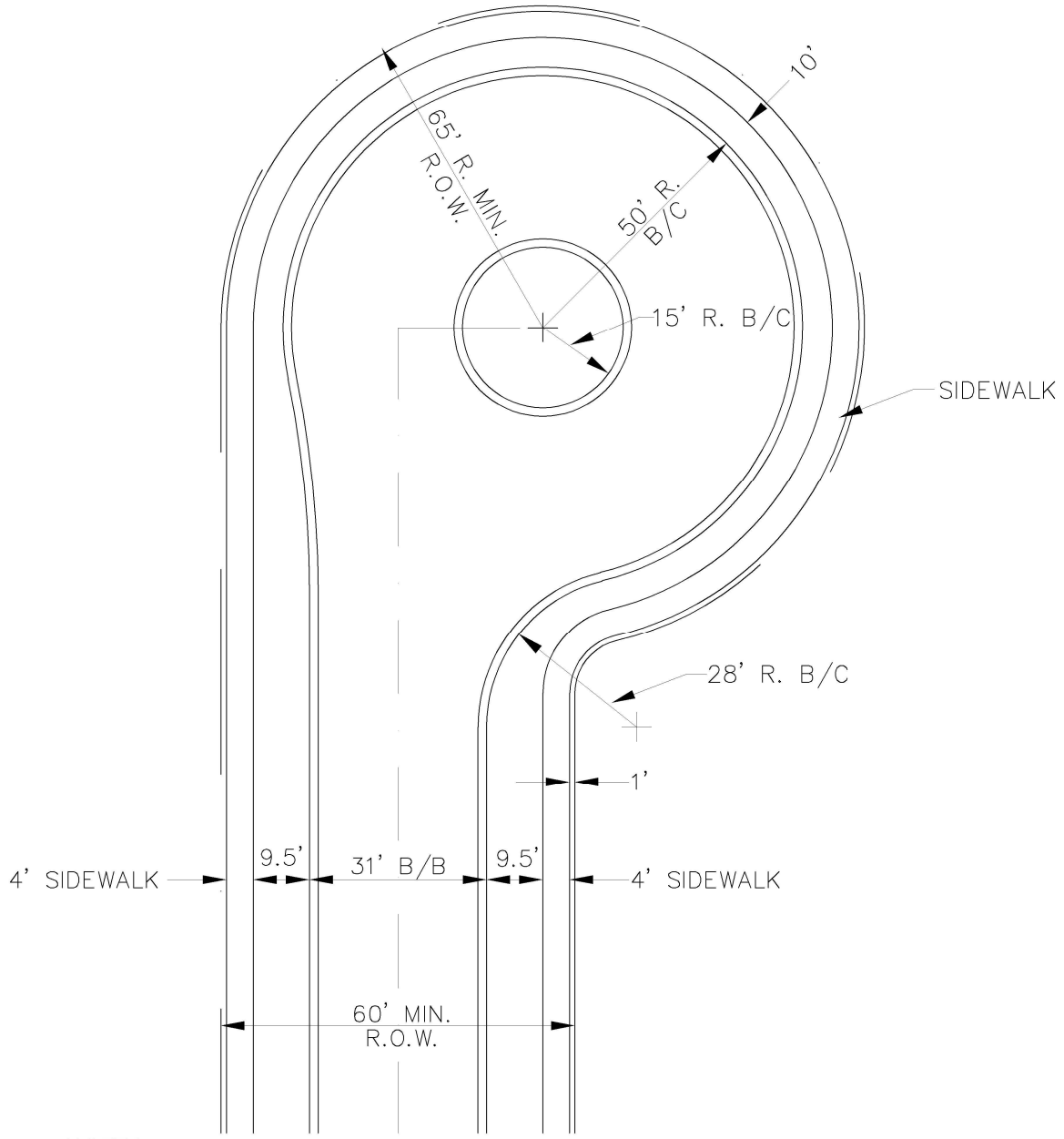

NOTES:

1.) ISLANDS ARE OPTIONAL AT THE DISCRETION OF THE CITY.

2.) FIRE HYDRANTS AND STREET LIGHTS SHALL BE LOCATED IN THE THROAT OF THE CUL-DE-SAC AND NOT THE BULB UNLESS DIRECTED BY THE CITY

3.) ALL DRIVEWAYS ON CUL-DE-SACS MUST HAVE A MINIMUM OF 10' SEPARATION AT THE CURB LINE

NOT TO SCALE

ECCENTRIC CUL-DE-SAC

DATE: 4-2-13

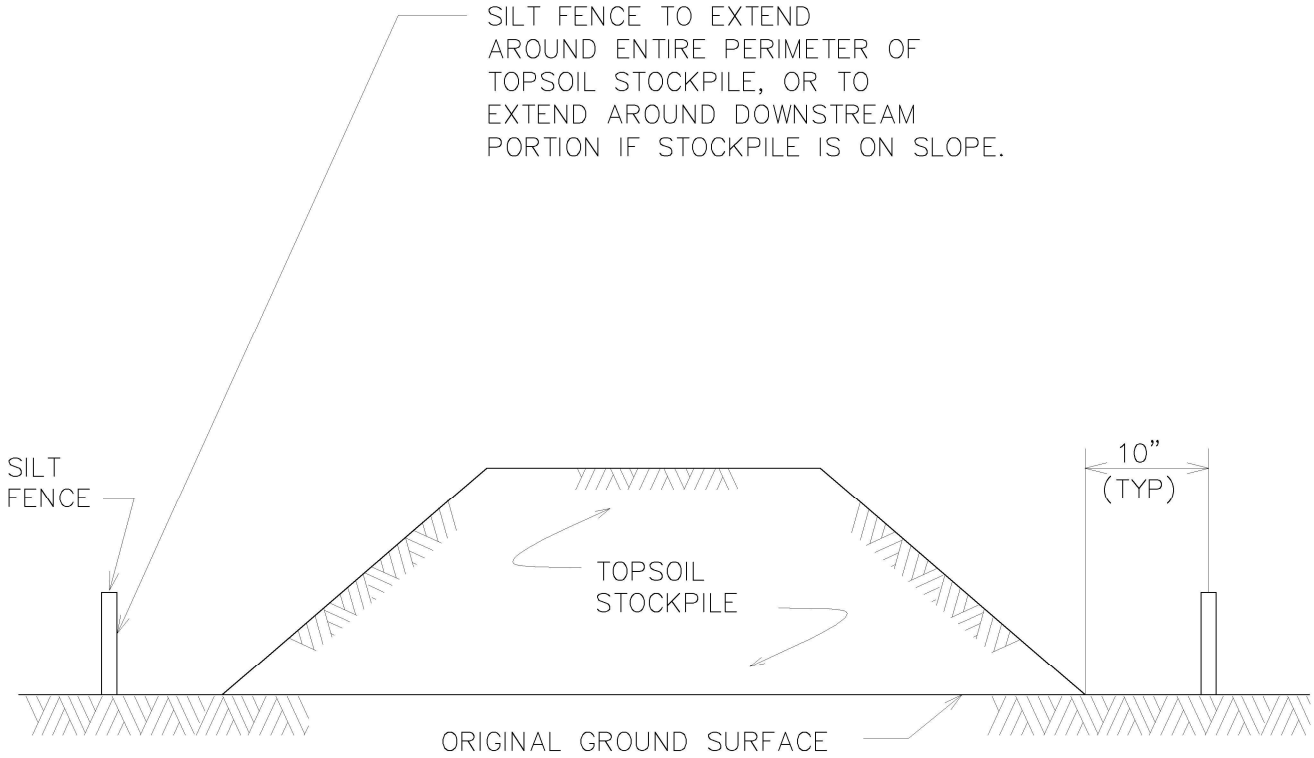

NOTES:

1. AN ON-SITE DRAINAGE SWALE SHALL BE LOCATED BETWEEN THE TOPSOIL STOCKPILE AND OFF-SITE PROPERTY.
2. REFERENCE IS MADE TO THE SILT FENCE DETAIL FOR MATERIALS AND INSTALLATION METHODS.
3. IF THE STOCKPILE IS TO REMAIN FOR MORE THAN 14 DAYS, IT SHALL BE STABILIZED WITH EROSION CONTROL BLANKET OR SEEDED WITHIN 1 DAY OF COMPLETION TO MINIMIZE EROSION.
4. INSPECTION OF SILT FENCES SHALL BE AT LEAST ONCE PER WEEK AND AFTER RAIN EVENTS IN EXCESS OF 1/4". REPAIR OR REPLACEMENT SHALL BE MADE PROMPTLY AS NEEDED.
5. SEDIMENT TRAPPED BY THE FENCES SHALL BE REMOVED AND PROPERLY DISPOSED OF WHENEVER SIGNIFICANT ACCUMULATION OCCURS.
6. SILT FENCES SHALL BE MAINTAINED IN PLACE UNTIL TOPSOIL STOCKPILE HAS BEEN ELIMINATED AND SHALL BE REMOVED ONLY WHEN DIRECTED BY THE CITY.

NOT TO SCALE

TEMPORARY TOPSOIL STOCKPILE DETAIL

DATE: 4-13-2020

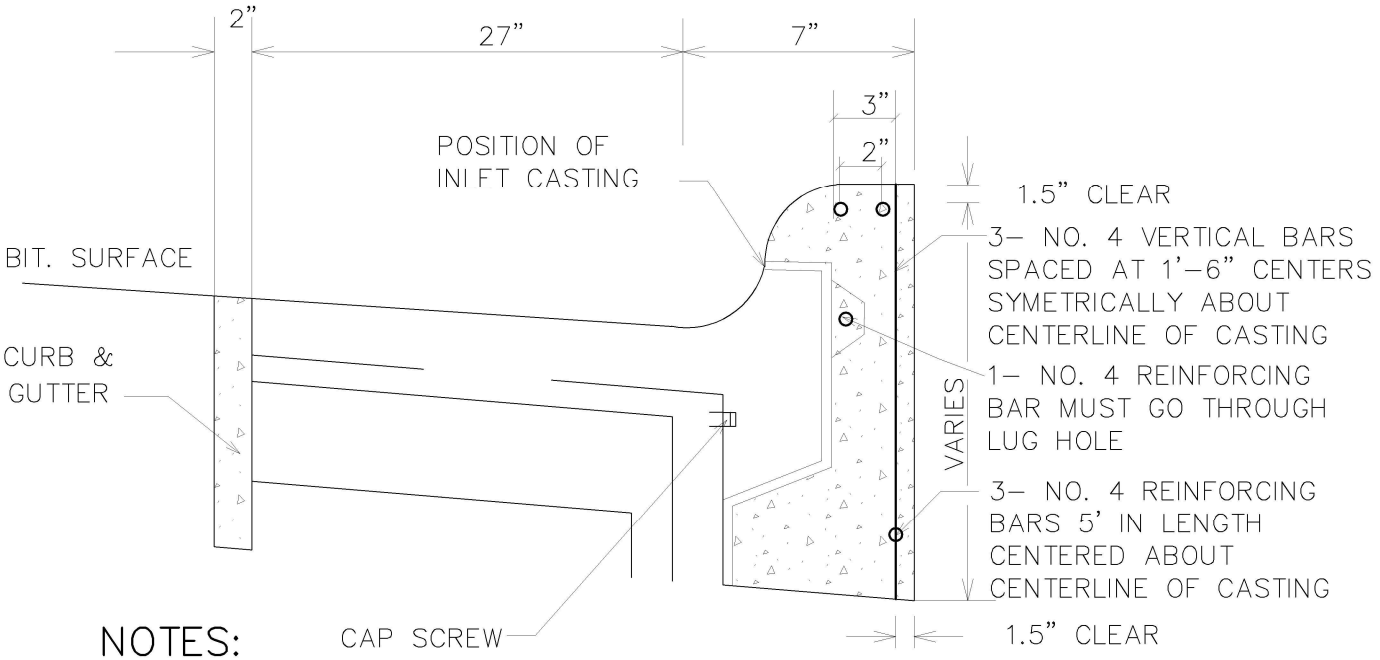

NOTES:

1. CURB INLET CASTING SHALL BE FASTENED TEMPORARILY TO FRAME CASTING WITH 2 CAP SCREWS, DURING CONSTRUCTION
2. CAP SCREWS MUST BE REMOVED AFTER CURB HAS HARDENED.

PROFILE VIEW

NOTE:
COST OF ADDITIONAL GUTTER
TO MATCH DETAIL INCIDENTAL

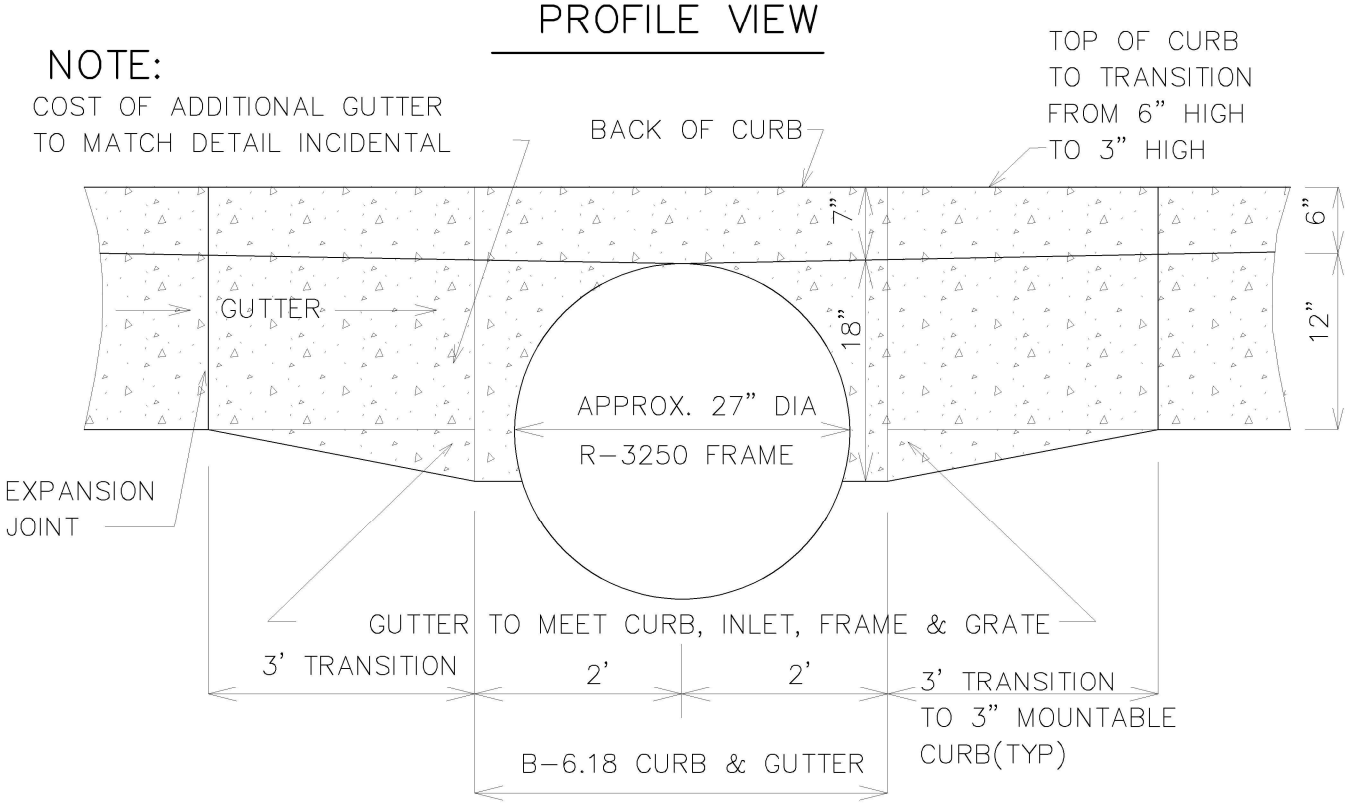

NOT TO SCALE

NOTES:

1. CURB CONTRACTOR TO VERIFY POSITION AND ELEVATION OF FRAME AND GRATE PRIOR TO POUR. IF NOT CORRECT, FIVE (5) FOOT TRANSITION AREA TO BE LEFT UNPOURED UNTIL SITUATION IS CORRECTED BY CONTRACTOR.

PLAN VIEW

DATE: 4-8-2020

B6.18 CURB AND GUTTER FOR R-3250 CURB INLET

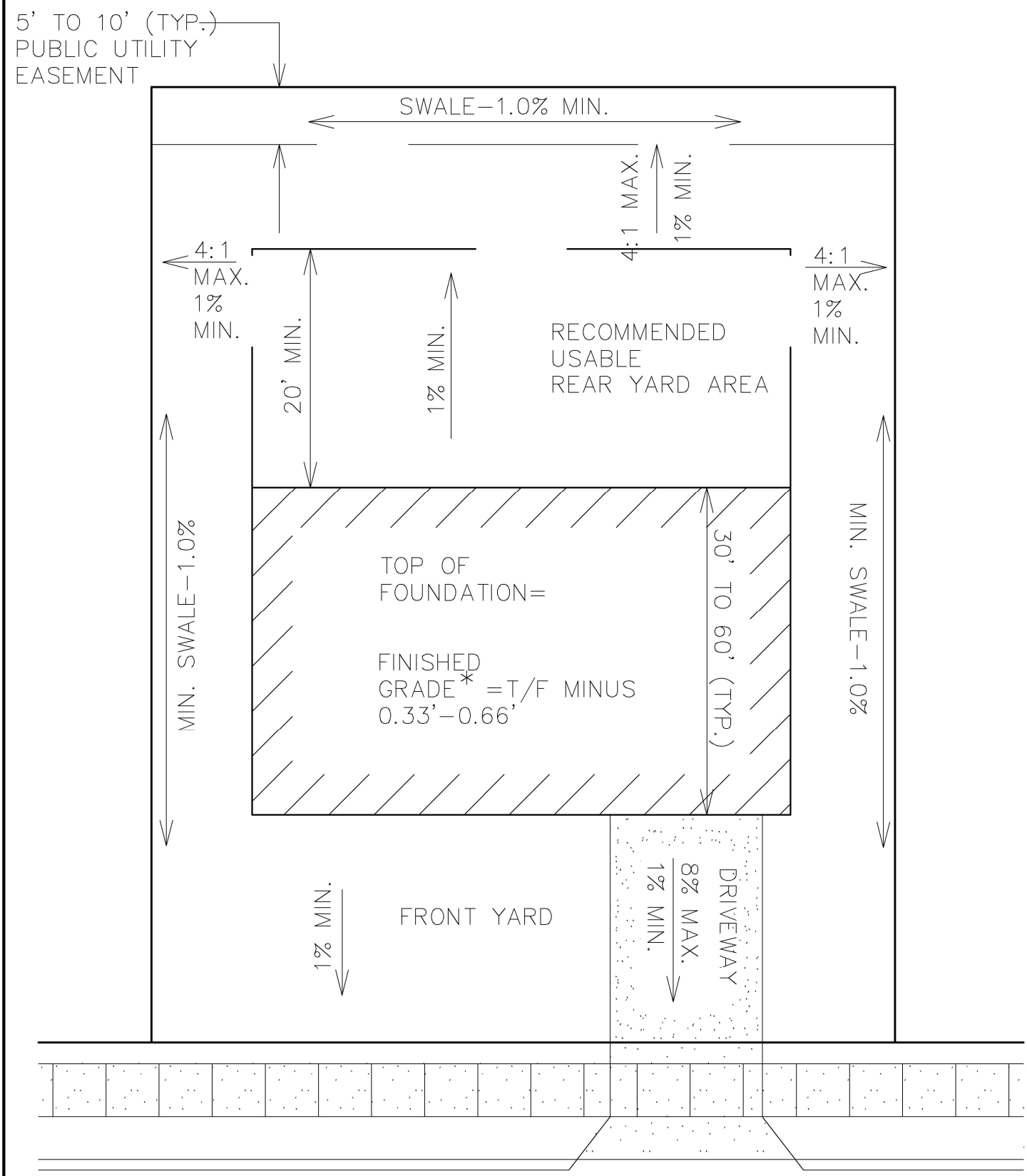

* IF THE BUILDING IS MULTI–LEVEL, SHOW PROPOSED TOP OF FOUNDATION AND FINISHED GRADE AT ALL LEVELS.

STREET

LOT GRADING GUIDELINES

DATE: 4–13–2020

DEPRESSED CURB

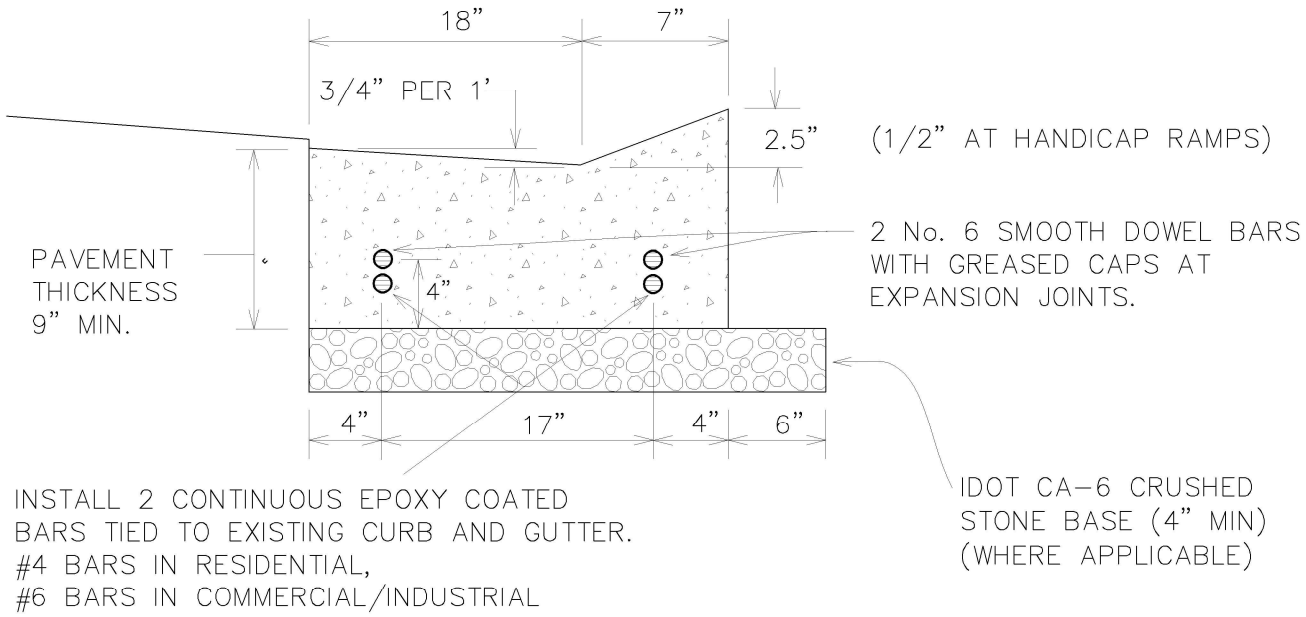

B6.18 CURB & GUTTER

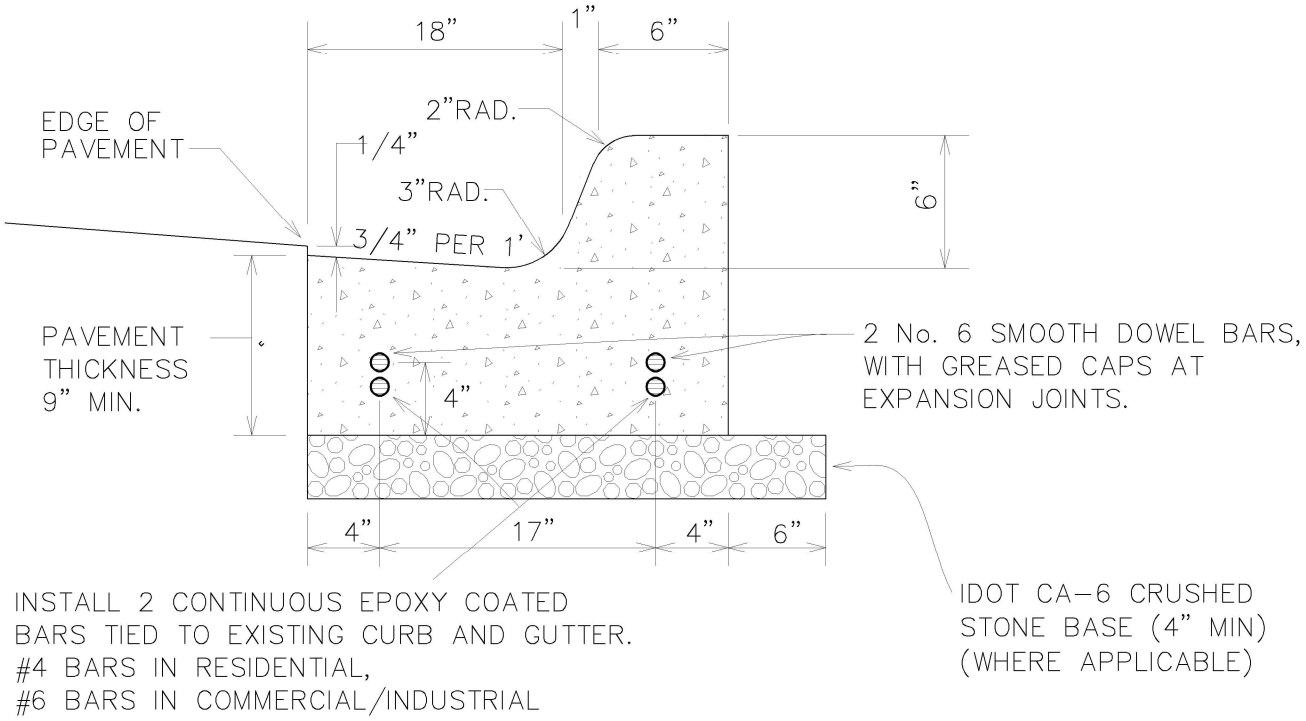

NOTES:

1. CONTRACTION JOINTS SHALL BE PLACED AT 15' INTERVALS, AND SHALL BE FORMED BY SAW CUTTING TO A DEPTH OF AT LEAST TWO INCHES. WITHIN 24 HOURS OF POURING

2. EXPANSION JOINTS SHALL BE PLACED AT 60' (MAX) INTERVALS, AT ALL POINTS OF CURVATURE, AND AT THE END OF EACH POUR.

DATE: 4-13-2020
NOT TO SCALE

B6.18 COMB. CONCRETE CURB AND GUTTER (SPECIAL)
B6.18 P.C.C. INTEGRAL CURB AND GUTTER (SPECIAL)

DEPRESSED CURB

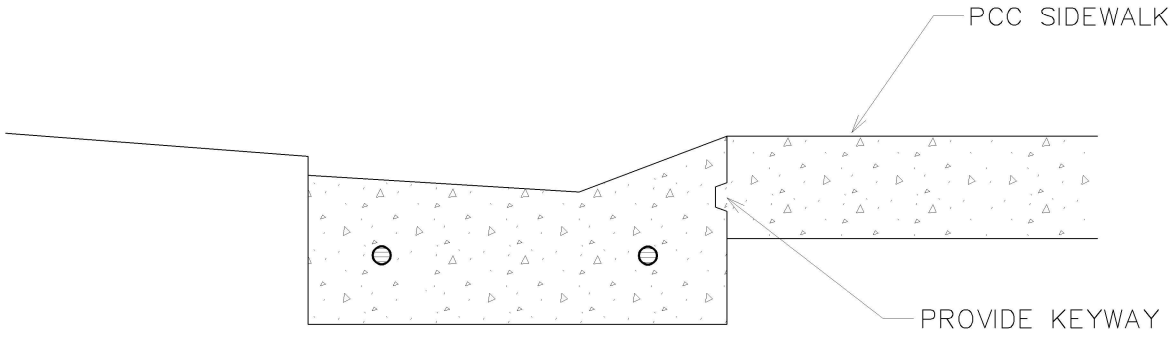

CURB & GUTTER

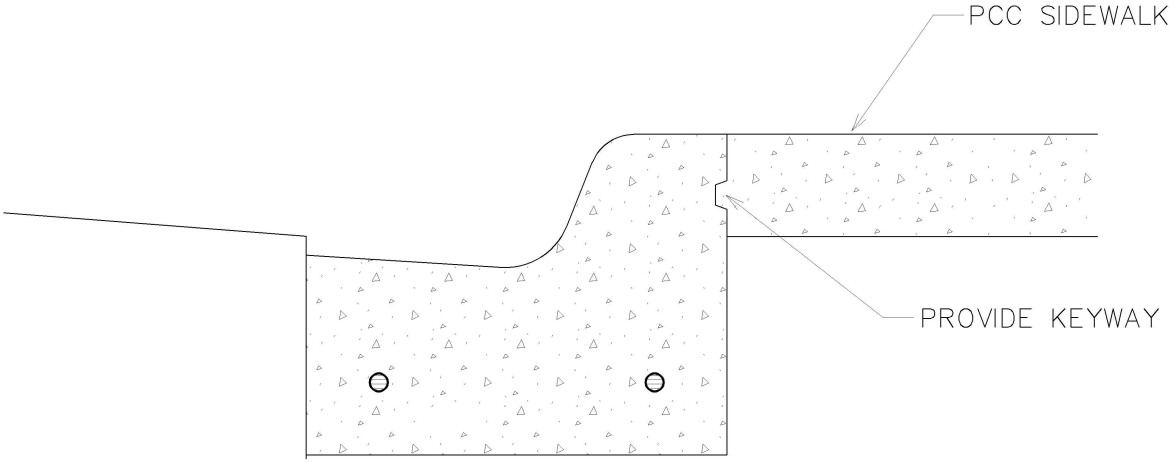

NOTES:

1. SEE TYPICAL DETAIL FOR CURB AND GUTTER FOR CURB DIMENSIONS AND SPECIFICATIONS.

NOT TO SCALE

DATE: 4-13-2020

SIDEWALK AT CURB AND GUTTER

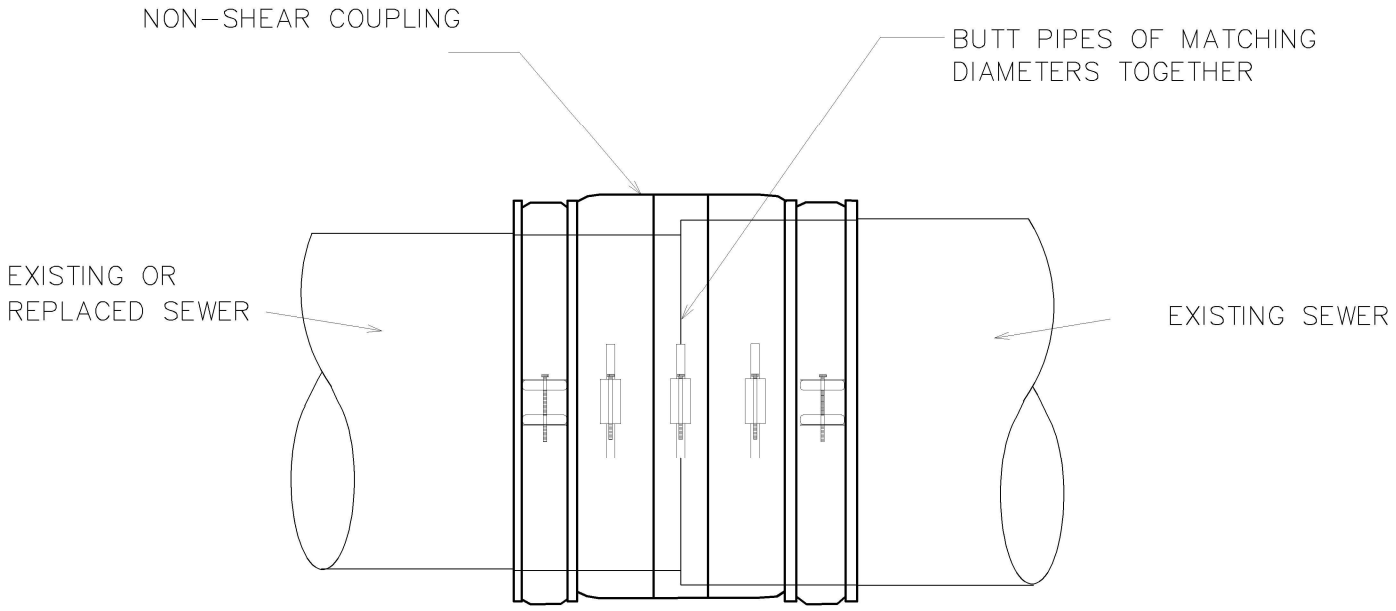

NOT TO SCALE

PIPE COUPLING DETAIL

DATE: 4-10-2020

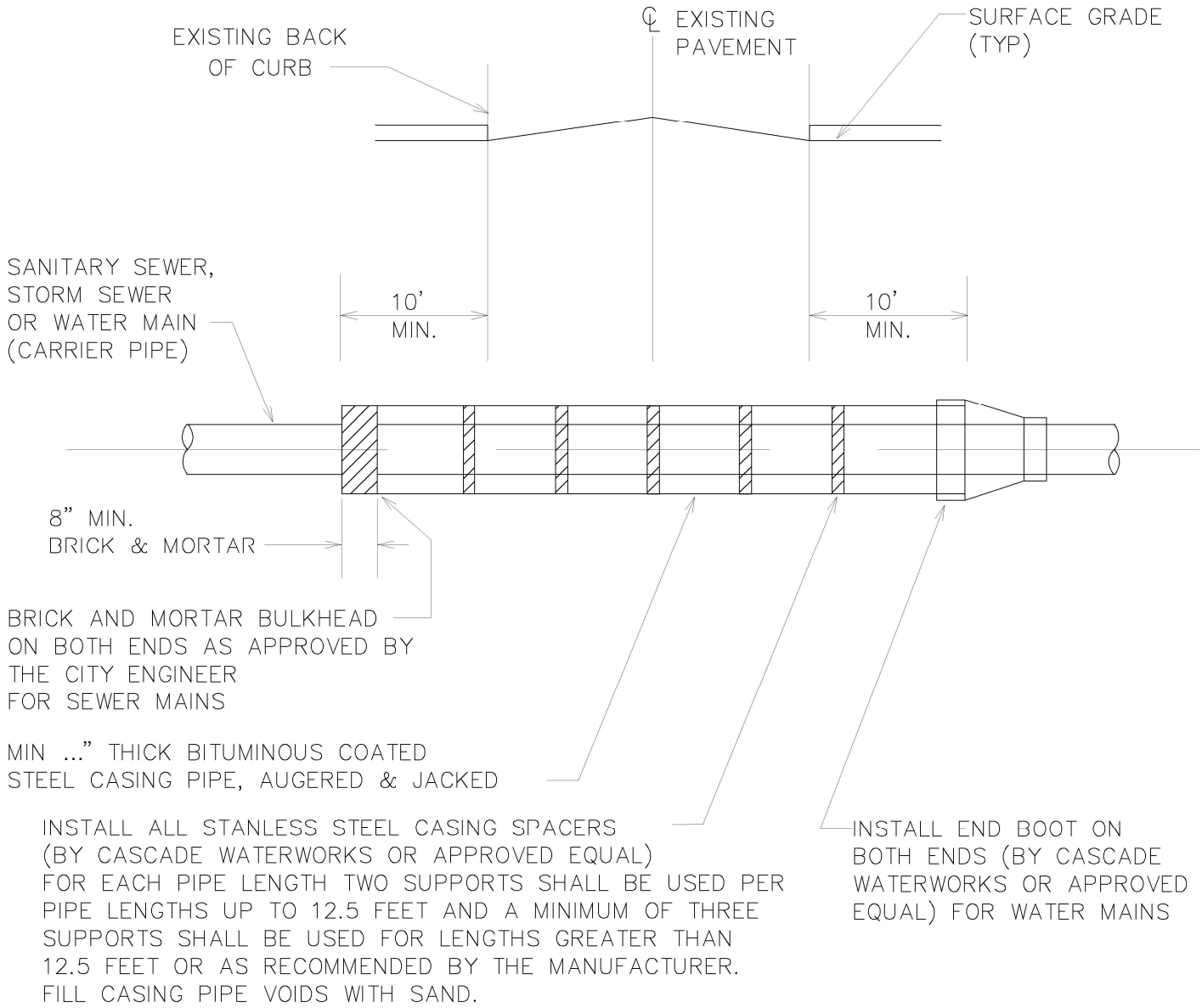

NOTES:

1. CASING PIPE IS REQUIRED UNDER ALL EXISTING ROADWAYS, OR AS OTHERWISE DIRECTED BY THE CITY ENGINEER WHERE OPEN CUTS ARE NOT PERMITTED, EXCEPT FOR WATER SERVICE LINES UP TO 2" IN DIAMETER.
2. WATER MAIN CASING SPACERS SHALL BE RESTRAINED IN POSITION.
3. THE INSIDE DIAMETER OF THE CASING PIPE SHALL BE DETERMINED BY CONTRACTOR BUT IN NO CASE SHALL IT BE LESS THAN 8" LARGER THAN THE DIAMETER OF THE CARRIER PIPE TO ALLOW AMPLE SPACE FOR BELLS, AND CARRIER PIPE SLOPE (FOR GRAVITY PIPE).
4. ALL AUGER PITS TO BE BACKFILLED WITH IDOT CA-7 VIRGIN CRUSHED LIMESTONE MATERIAL.
5. POLY WRAPPED WATER MAIN REQUIRED IN CASING.

NOT TO SCALE

DATE: 4-10-2020

CASING PIPE DETAIL

DEPRESSED CURB

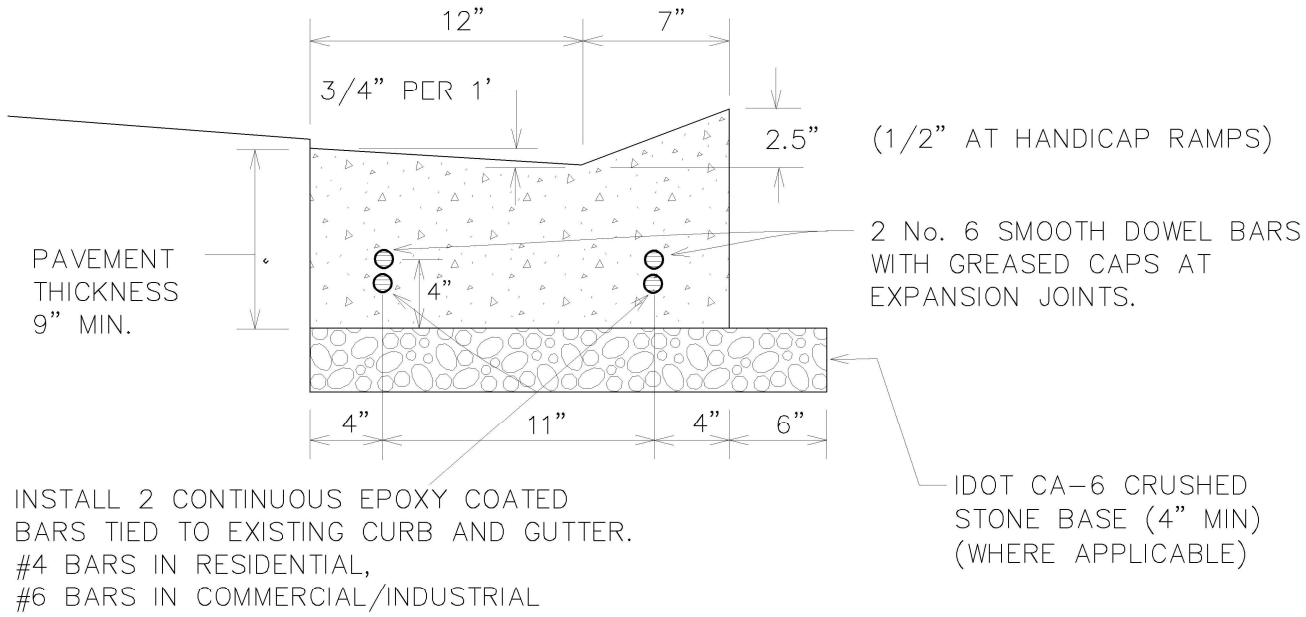

B4.12 CURB & GUTTER

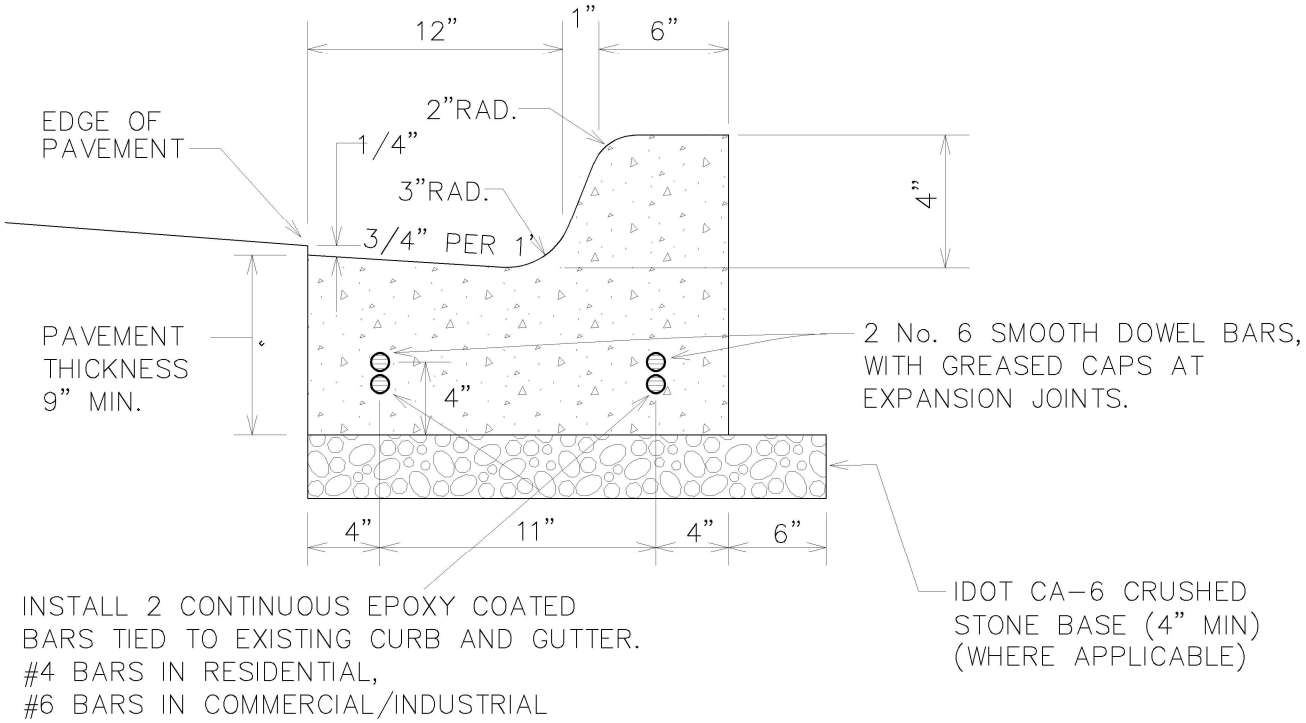

NOTES:

1. CONTRACTION JOINTS SHALL BE PLACED AT 15' INTERVALS, AND SHALL BE FORMED BY SAW CUTTING TO A DEPTH OF AT LEAST TWO INCHES. WITHIN 24 HOURS OF POURING

2. EXPANSION JOINTS SHALL BE PLACED AT 60' (MAX) INTERVALS, AT ALL POINTS OF CURVATURE, AND AT THE END OF EACH POUR.

DATE: 4-13-2020
NOT TO SCALE

B4.12 COMB. CONCRETE CURB AND GUTTER (SPECIAL)
B4.12 P.C.C. INTEGRAL CURB AND GUTTER (SPECIAL)

EROSION CONTROL BLANKET:

STANDARD	DESCRIPTION
IUM-530	EROSION CONTROL BLANKET
IUM-531	EROSION CONTROL BLANKET, TURF REINF. MAT

INLET PROTECTION:

STANDARD	DESCRIPTION
IL-555	EXCAVATED DRAIN
IL-560	FABRIC DROP
IL-562	SOD FILTER
IUM-561C	FILTER BAG
IUM-561D	SEDIMENT BAG/FILTER

END SECTION INLET PROTECTION:

STANDARD	DESCRIPTION
IL-508SF	CULVERT INLET PROTECTION - SILT FENCE
IL-508ST	CULVERT INLET PROTECTION - STONE

DITCH CHECK:

STANDARD	DESCRIPTION
IUM-514PC	PLASTIC PERMEABLE
IUM-514RC	ROLLED EROSION CONTROL
IUM-514SC	SYNTHETIC POROUS CONTROL
IUM-514UF	URETHANE FOAM GEOTEXTILES
IUM-514VC	VEGETATED EROSION CONTROL
IL-605CA	ROCK CHECK DAM - COARSE AGGREGATE
IL-605R	ROCK CHECK DAM - RIPRAP

SILT FENCE:

STANDARD	DESCRIPTION
IUM-620A	SILT FENCE
IUM-620AW	SILT FENCE WITH WIRE SUPPORT
IUM-620BW	SILT FENCE SPLICING

NOTE:
STANDARDS ARE PER THE NATURAL RESOURCES CONSERVATION SERVICE AS PUBLISHED IN THE ILLINOIS URBAN MANUAL, LATEST EDITION.

DATE: 4-10-2020

EROSION CONTROL